KIT CONNECTION GUIDE · IN ENGLISH

3-phase kit 19.5 kW + BRAUN 32 kWh

3 × POWLAND SMS-6.5KP 48 V and BRAUN Power 51.2 V 628 Ah cabinet: how to connect, configure and start up, according to the manufacturers' manuals; * = seller's recommendation or calculation

Kit contents

	What is in the kit
Inverters	**3 × POWLAND SMS-6.5KP** — hybrid inverters 6.5 kW, 48 V, parallel version (KP), Wi-Fi
Power	**19.5 kW** rated (3 × 6.5 kW), one inverter per phase; in parallel 95 % (datasheet) ≈ **18.5 kW*;** per phase no more than ≈ **6.2 kW*** (6.5 kW × 95 %): spread the load across the phases*
Battery	**BRAUN Power 51.2 V 628 Ah 32 kWh (**LiFePO4, cabinet on wheels): one, **shared** by all three inverters; cabinet current: recommended **50 A,** max. **195 A (**≈ 9 kW output*, p. 4)
Solar panels	**not included in the kit.** Each inverter has its own PV input (per the datasheet up to 27 A / 9000 W); one string must not be connected to several inverters
Parallel cables	1 Ethernet cable for the parallel link supplied with each inverter (datasheet); the ring has 3 connections

What the manual says about three phases. Up to 9 inverters in parallel; for three phases each phase must have at least **one working inverter** (here, one each). If the system has batteries, all inverters are connected to the **same** batteries; the manual recommends a common copper busbar. A parallel system can also run without batteries and grid, but the output power is then reduced.

AC diagram

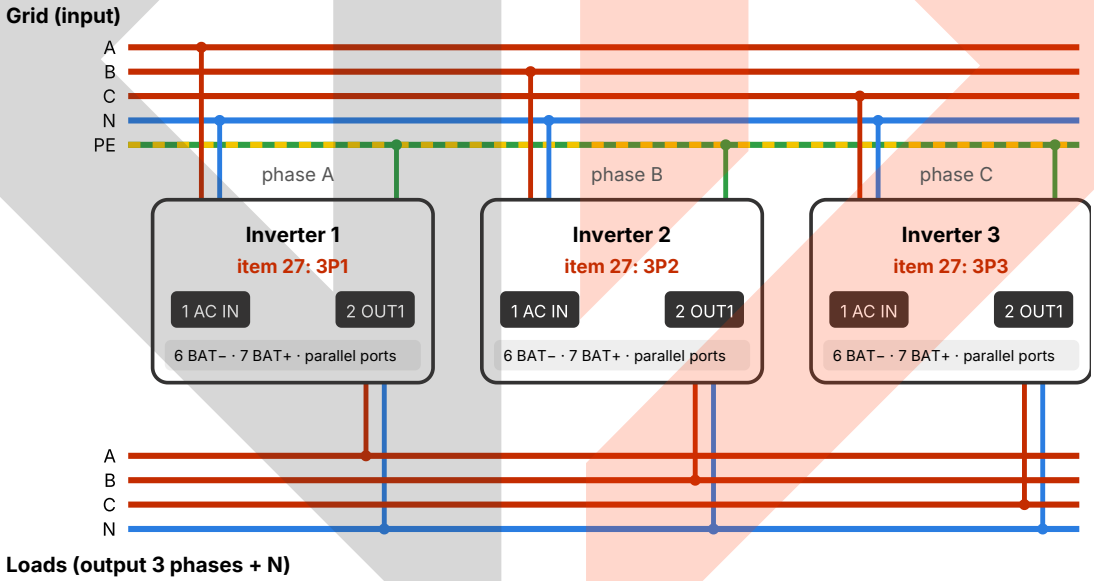

According to figure 5.2 of the manual: grid phase A → AC IN of inverter 1 (3P1), B → inverter 2 (3P2), C → inverter 3 (3P3); the AC IN neutrals are connected together and to the grid N; the OUT1 neutrals together and to the load N; do not connect input and output N (sect. 3.3). The **PE (** yellow-green) of each inverter goes to the earthing screw on the side (11) and to the PE bar; it is connected **first (**sect. 3.3). The OUT1 outputs supply load phases A, B, C. The grid cables of one phase are identical in material, cross-section and length; the same applies to the output cables. If you use OUT2, they are connected separately from OUT1 in the same way. Numbers 1, 2, 6, 7 are connectors on the bottom panel, 11 on the side wall (p. 2).

Protection

- The AC input breaker in a parallel system must have a **300 mA** residual current rating.
- For each inverter: AC breaker **40 A /** cable 6 mm² at the input; battery: cable 25 mm², protection 150 A (recommendations for one inverter; the manual advises sizing breakers with the number of inverters in mind).
- The cables from the batteries to the inverters are identical in material, cross-section and length.

minertech.org · MinerTech® trademark · © 2017–2026, all rights reserved
+38 093 293 93 93 · +38 099 054 40 38 · Specialist Pavlo Leonidovych · strooks@gmail.com

Parallel connectors and cables

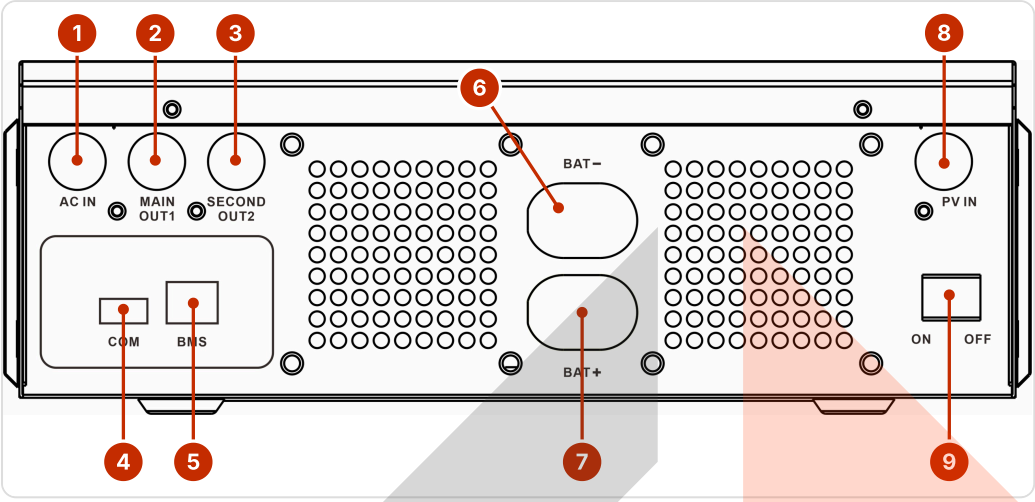

Bottom panel (figure from the manual, section 3.5.2): 1 AC IN, 2 MAIN OUT1, 3 SECOND OUT2, 4 COM (Wi-Fi), 5 BMS, 6 BAT−, 7 BAT+, 8 PV IN, 9 ON/OFF.

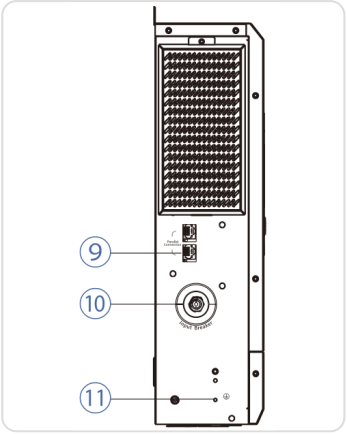

Side wall (KP datasheet, its own numbering): 9 — parallel ports, 10 — AC input breaker, 11 — PE.

Parallel communication cables in a ring

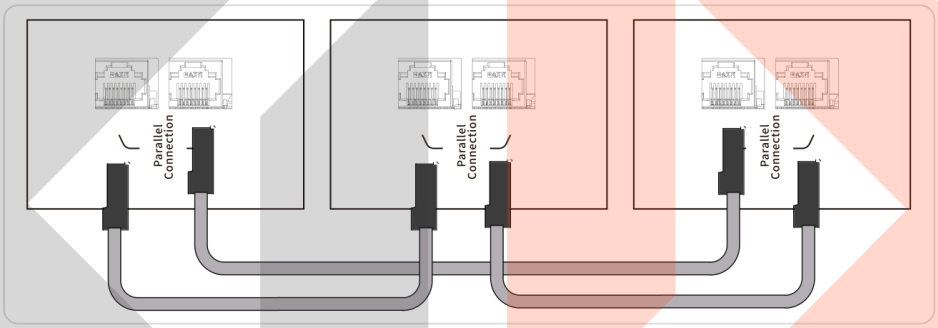

Figure from the manual (section 5.3): 3 inverters. The cable plugs into any parallel port; phase and order do not matter, but the connection must form a **ring** (1→2→3→1). Route the communication cables separately from the power cables, at least 5 cm apart. The BMS cable goes to **one** inverter only (sect. 5.4): here from the cabinet's RS485A port (7) to the 5 BMS port of **inverter 1 (**p. 4). Wi-Fi (sect. 5.6): either a module on one inverter, which transmits the data of the whole system, or modules on each of the three, each transmitting its own; if modules are on two of them, the third inverter does not transmit data.

Setup order (section 5.5)

1. The cabinet is connected and configured per p. 4, steps 1–4 (ADD, power cables, BMS cable, UART1 = 014). Check the wiring: all breakers (PV, AC input, AC output, battery) and the busbar → cabinet DC protection are open; the inverter PE (11) and cabinet earth (16) are connected; the AC IN neutrals are connected together, the OUT1 neutrals together, input and output N are not connected.
2. The **ON/OFF** switches (9) of all inverters are OFF. Switch on the BRAUN cabinet with its breaker (15), then the busbar → cabinet DC protection (if it is a breaker), then the inverters' battery breakers so that the inverters get power.
3. The grid is not yet connected (AC input breakers open, step 1), so: switch the inverter on with the ON/OFF switch, wait for the display and set it to OFF; the display stays lit for a while.
4. While ON/OFF is OFF (otherwise the settings cannot be saved: manual, 5.5.1), set per p. 3: **27 =** 3P1 / 3P2 / 3P3, **17 = FEL, 19 = 46 V*, 07 / 06 = 10 A*, 04 = UPS;** on inverter 1 (BMS cable) also **44 = PYL, 45 = AtO, 46 = OFF*,** on inverters 2 and 3: **44 = OFF*.**
5. Repeat steps 3–4 on each inverter.
6. Switch ON/OFF on the inverters, then the PV and AC input breakers. The load breaker (AC output) goes **last,** once the whole system is working normally (manual, sect. 5): after step 7 and the check on p. 4, steps 6–7*.
7. Check the phase sequence (04 = UPS from step 4). If the display shows that the grid does not connect: switch off the main grid breaker and the AC input breakers, make sure there is no voltage (sect. 3.3), swap two phases at the system input* and switch on again. Once the grid connects normally, 04 can be changed to APP: ON/OFF = OFF, change, then ON again.

minertech.org · MinerTech® trademark · © 2017–2026, all rights reserved
+38 093 293 93 93 · +38 099 054 40 38 · Specialist Pavlo Leonidovych · strooks@gmail.com

Three-phase settings

Menu items for three phases

Item	On the display	What to choose
27	PAn	Phase A inverter: **3P1,** phase B: **3P2,** phase C: **3P3.** If even one is set to SIG or one of the modes 3P1–3P3 is missing, fault **24** on all of them.
28	PId	**AtO (**auto, default) or numbers 1–9; two inverters must not be given the same number (fault 19).
30	POP	**OFF (**default) when there is a battery. ON: parallel with solar only, without a battery.
04	nOd	To check the phase sequence, **UPS;** after the grid connects normally, APP or UPS as needed.
12 / 25	PuS / StE	Power saving and soft start do not work in parallel: **OFF.**
17	bAt	**FEL (**LiFePO4); for communication with the BMS the inverter manual requires LIT or FEL (sect. 3.5.2)
19	bAU	Shutdown on battery discharge: **46 V* (**default for FEL 42 V, range 40–48 V) on all; one shutdown criterion for all three phases* (hence 46 = OFF*). The cabinet discharge cut-off is 43.2 V; 46 V makes the inverters stop before the BMS switches off the cabinet*. Inverters 2 and 3 without BMS data work on their own voltage settings (notes to items 20, 21)
44	bnS	Inverter 1 (BMS cable): **PYL (**PYLON); in the cabinet UART1 = 014 (PYLON)*; or GRO ↔ 006 (Growatt)*. Inverters 2 and 3 (no BMS cable): **OFF (**default)* or PYL if 44 synchronises with inverter 1 (p. 4, step 6)*
45	bnI	Inverter 1: **AtO (**auto, default)
46	bSU	Shutdown on low SOC (works only with BMS data, here inverter 1): default 20 %, then ALA 68 and standby. We set **OFF*:** otherwise at 20 % SOC only inverter 1 (phase A) would stop, not 2 and 3, whereas three-phase operation needs a working inverter on each phase (sect. 5; fault 24 includes phase loss). With OFF all three switch off the same way, per item 19 (46 V)*
07 / 06	nCC / tCC	Max. charge current / from the grid: **10 A / 10 A** on each inverter*, up to 30 A in total*, within the 50 A recommended for the cabinet (the next value, 20 A, would give 60 A in total*). 07 is the total charge current from solar and grid, so it also limits solar charging: in total ≈ 30 A × 51.2–55.2 V ≈ 1.5–1.7 kW*
61	ndC	Max. battery discharge current: **OFF (**default, no limit) or 10–140 A in 5 A steps; exceeding it gives ALA 60, after 5 s fault 14. We leave OFF*: the limit applies to each inverter separately, and 65 A* (3 × 65 = 195 A, cabinet max.) would stop an inverter already at ≈ 3 kW on its phase*, which means losing the phase. Keep within the cabinet limit of 195 A through the load (p. 4) and DC protection ≤ 195 A*; with evenly loaded phases, 61 = 65 A* is possible

Entering the menu: hold ENTER for 2 s, UP / DOWN to choose an item, ENTER to change, ENTER to save, ESC to exit. All items are set while the ON/OFF switch is OFF (manual, 5.5.1, note 1; p. 2, step 4), and then switched back ON (5.5.1, step 6). The system determines the master and slave inverters itself; once the parallel system is set up, changes to other parameters on one inverter are picked up by the others automatically (manual, 5.5.1, note 3), so check items 19, 44 and 46 per p. 4, step 6.

Parallel codes: 19: same number (ID); 20: communication failure; 21 / 22 / 23: different battery voltage / grid voltage / frequency between inverters; 24: different parallel modes, phase loss or an inverter in SIG mode; 25: loss of output synchronisation. Warning **ALA 56:** no communication with the BMS (p. 4).

minertech.org · MinerTech® trademark · © 2017–2026, all rights reserved
+38 093 293 93 93 · +38 099 054 40 38 · Specialist Pavlo Leonidovych · strooks@gmail.com

BRAUN 32 kWh cabinet: power cables, BMS and protocol

DC and communication diagram

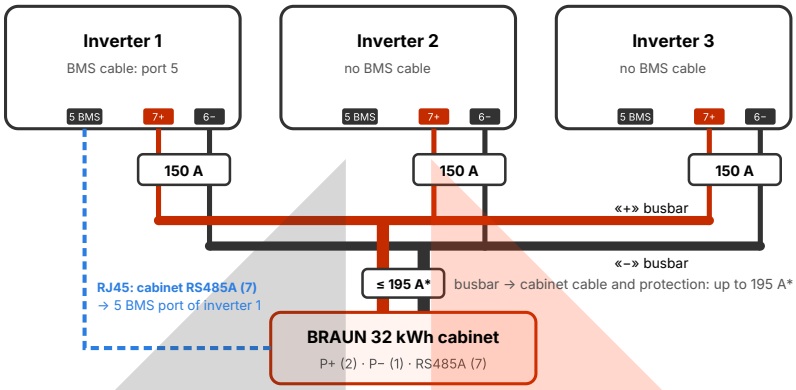

Connecting the cabinet to the system

1. The cabinet is off: breaker (15) OFF. Address switches **ADD (9):** all OFF (address 0, one cabinet).
2. Power cables: each inverter with a 25 mm² cable through its own 150 A protection to the common busbars; the cables are identical in length and cross-section (inverter manual). From the busbars: «+» → terminals **P+ (2), «–» →** terminals **P– (1);** the cabinet has two terminals per pole, use both*. The busbar → cabinet cable is rated for up to 195 A*, with its own DC protection ≤ 195 A* near the cabinet (the rating of the cabinet breaker (15) is not given in the sources). Cabinet earth (16) to the PE bar*.
3. RJ45 communication cable (straight): cabinet port **RS485A (7)** → **5 BMS** port of inverter 1. On the inverter pin 1 = RS485B, 2 = RS485A; on the JK BMS 1 = B, 2 = A, so they match pin to pin. The CAN (6), RS485B / RS485C (4, 3) ports are not needed here.
4. **JK BMS (**Bluetooth) app: Settings → **UART1 Protocol No. → 014 (9600) PYLON →** OK. Passwords and screenshots are in the cabinet manual.
5. Switching on and setup per p. 2, steps 1–7: first ON/OFF of all inverters to OFF, PV and AC breakers open; then the cabinet breaker (15), the busbar → cabinet DC protection and the inverters' battery breakers.
6. Check the settings from p. 2 (step 4): on all of them **17 = FEL,** 19 = 46 V*, 07 / 06 = 10 A*; on inverter 1: **44 = PYL, 45 = AtO, 46 = OFF*;** on 2 and 3: **44 = OFF*.** The inverters synchronise parameters (manual, 5.5.1, note 3): if 2 or 3 now shows 44 = PYL with ALA 56, set OFF* there (ON/OFF = OFF, load off*, then ON again) and check inverter 1: **44 = PYL,** P3–P8 visible. If OFF has also carried over to inverter 1, set PYL back the same way and leave PYL on all of them*: ALA 56 on 2 and 3 is only a warning; without BMS data an inverter works on its own voltage settings (manual, items 44, 20, 21).

7. Check: communication works if pages **P3–P8** (battery voltage, current, SOC) are visible on inverter 1 with UP / DOWN; ERR there or **ALA 56** means no communication; if there are no P3–P8 pages at all, inverter 1 has 44 = OFF (step 6). If all is well and ON/OFF of all three inverters is ON, switch on the load breaker (p. 2, step 6).

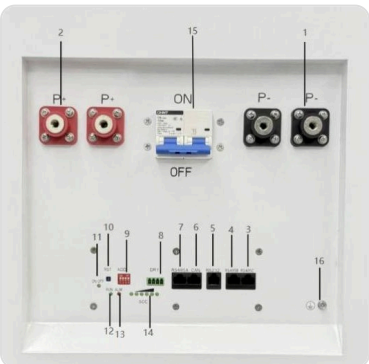

Cabinet panel: 1 / 2: P– / P+ terminals (two each), 3 / 4: RS485C / RS485B (between cabinets only), 5: RS232, 6: CAN, 7: **RS485A (**communication with the inverter), 8: dry contact, 9: ADD address switches, 10: RST, 11: ON/OFF power indicator, 12 / 13: RUN / ALM indicators, 14: SOC charge level, 15: breaker, 16: earth.

Important about power. The cabinet delivers up to **195 A** for the whole system (195 A × 51.2 V ≈ 10 kW*, with 94 % efficiency ≈ 9 kW output*), while three inverters in parallel give ≈ 18.5 kW*. Without the grid, load above solar generation up to ≈ 9 kW* (item 61, p. 3); with the grid up to ≈ 18.5 kW (≈ 6.2 kW per phase)*. For more from the battery, cabinets in parallel* (RS485B / C between them, different ADD addresses): first charge each one separately to the same voltage*, then connect «+» to «+», «–» to «–».

minertech.org · MinerTech® trademark · © 2017–2026, all rights reserved
+38 093 293 93 93 · +38 099 054 40 38 · Specialist Pavlo Leonidovych · strooks@gmail.com