KIT CONNECTION GUIDE · IN ENGLISH

3-phase kit 19.5 kW + 2 × MFUZOP 32 kWh

3 × POWLAND SMS-6.5KP 48 V and two MFUZOP 51.2 V 314 Ah batteries in parallel: how to connect, configure and start up, according to the manufacturers' manuals; * = seller's recommendation, calculation or data

Kit contents

	What is in the kit
Inverters	**3 × POWLAND SMS-6.5KP:** hybrid inverters 6.5 kW, 48 V, parallel version (KP), Wi-Fi (Wi-Fi monitoring per the datasheet)
Power	**19.5 kW** rated (3 × 6.5 kW), one inverter per phase; in parallel 95 % (datasheet) ≈ **18.5 kW*;** per phase no more than ≈ **6.2 kW*** (6.5 kW × 95 %): spread the load across the phases*
Batteries	**2 × MFUZOP 51.2 V 314 Ah 16.07 kWh** (LiFePO4 16S, per the product description) in parallel: **32.14 kWh*** in total, 628 Ah*, **shared** by all three inverters (common copper busbar, per the manual); max. charge / discharge current **210 A** each per the rating plate, up to 420 A together* (continuous output ≈ 14 kW*, p. 3); BMS cable RS485 from battery 1 to inverter 1, battery 2 linked by cable to battery 1*, Pylon protocol (selected on the display of each battery, sect. 5.6)
Solar panels	not included in the kit; each inverter has its own PV input (per the datasheet up to 27 A / 9000 W); one panel string must not be connected to several inverters
Parallel cables	1 Ethernet cable for the parallel link supplied with each inverter (datasheet); the ring has 3 connections

What the manual says about three phases. Up to 9 inverters in parallel; for three phases each phase must have at least **one working inverter** (here, one each). If the system has batteries, all inverters are connected to the **same** batteries; the manual recommends a common copper busbar. A parallel system can also run without batteries and grid, but the output power is then reduced.

AC diagram

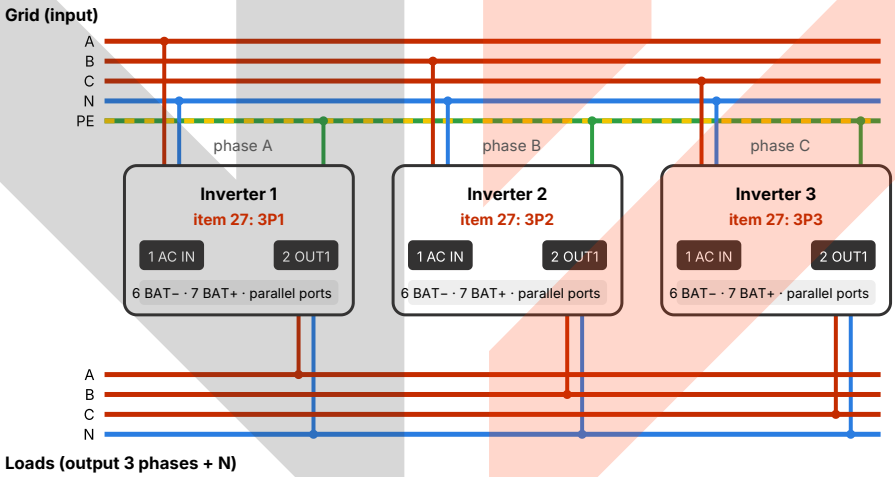

According to figure 5.2 of the manual: grid phase A → AC IN of inverter 1 (3P1), B → inverter 2 (3P2), C → inverter 3 (3P3); the AC IN neutrals are connected together and to the grid N; the OUT1 neutrals together and to the load N; do not connect input and output N (sect. 3.3). **Do not mix up L and N** (check with a tester): in parallel this would short-circuit the grid (sect. 3.3; datasheet). The **PE** (yellow-green) of each inverter goes to the earthing screw on the side (11, p. 2) and to the PE bar; it is connected **first** (sect. 3.3). The OUT1 outputs supply load phases A, B, C. If you use OUT2, they are connected separately from OUT1 in the same way. Numbers 1, 2, 6, 7 are connectors on the bottom panel (p. 2).

Protection

- Connect the AC and PV cables with the breakers open; do not switch on any breakers until all connections are complete; check the PV polarity with a multimeter (manual, p. 7, 10).
- In a parallel system the AC input breaker is a residual-current device (RCD / RCBO) with a leakage current of **300 mA.**
- For each inverter: AC breaker **40 A /** cable 6 mm² at the input; battery: cable 25 mm², protection 150 A (recommendations for one inverter; the manual advises sizing breakers with the number of inverters in mind).
- The cables from the batteries to the inverters are identical in material, cross-section and length.

minertech.org · MinerTech® trademark · © 2017–2026, all rights reserved
+38 093 293 93 93 · +38 099 054 40 38 · Specialist Pavlo Leonidovych · strooks@gmail.com

Parallel connectors and cables

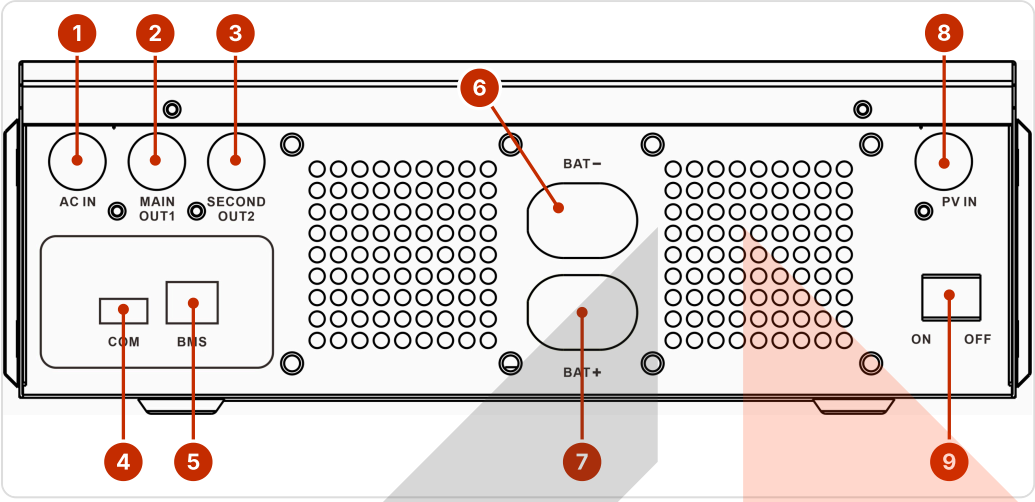

Bottom panel (figure from the manual, section 3.5.2): 1 AC IN, 2 MAIN OUT1, 3 SECOND OUT2, 4 COM (Wi-Fi), 5 BMS, 6 BAT−, 7 BAT+, 8 PV IN, 9 ON/OFF.

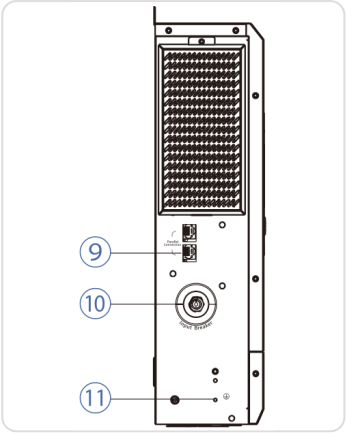

Side wall (KP datasheet, its own numbering): 9 — parallel ports, 10 — AC input breaker, 11 — PE.

Parallel communication cables in a ring

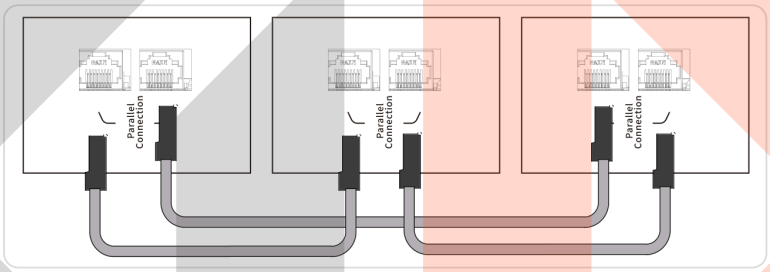

Figure from the manual (section 5.3): 3 inverters. The cable plugs into any parallel port; phase and order do not matter, but the connection must form a **ring** (1→2→3→1). Route the communication cables separately from the power cables, at least 5 cm apart. The BMS cable goes to **one** inverter only (sect. 5.4): here from RS485 (5) of battery 1 to the 5 BMS port of **inverter 1** (p. 4). Wi-Fi (sect. 5.6): a module on one inverter transmits the data of the whole system; modules on all three each transmit their own data; with modules on two of the three, the third does not transmit data.

Setup order (section 5.5)

1. Check the wiring (battery per p. 4, steps 1–3): all breakers (PV, AC input, AC output, battery) open; PE of all inverters connected (p. 1); AC IN neutrals connected together, OUT1 neutrals together, input and output N not connected; L and N on AC IN and OUT1 not mixed up (tester; sect. 3.3).
2. The **ON/OFF** switches (9 on the bottom panel) of all inverters are OFF. Switch on both MFUZOP batteries (p. 4): on each, the breaker (15) and power button (14), then the DC breakers ≤ 210 A* on the battery cables (p. 4, step 2), then the inverters' battery breakers so that the inverters get power.
3. The grid is not yet connected (AC input breakers open, step 1), so: switch the inverter on with the ON/OFF switch, wait for the display and set it to OFF; the display stays lit for some time.
4. While ON/OFF is OFF (otherwise the settings cannot be saved: manual, 5.5.1), set per p. 3: **27 =** 3P1 / 3P2 / 3P3, **03 = GPB** (or PGB), **17 = FEL, 19 = 46 V*, 07 / 06 = 40 A*, 04 = UPS;** on inverter 1 (BMS cable) also **44 = PYL, 45 = AtO,** on inverters 2 and 3: **44 = OFF*;** 28 = AtO, 30 = OFF, 12 / 25 = OFF are factory defaults, check them.
5. Repeat steps 3–4 on each inverter.
6. Switch ON/OFF on the inverters, then the PV and AC input breakers. The load breakers come after the checks (step 7 and p. 4, step 6): the manual advises starting the whole system first to avoid overload.
7. Check the phase sequence (04 = UPS from step 4). If the display shows that the grid does not connect: switch off the AC input breakers and the grid supply upstream (manual, p. 7), make sure there is no voltage, swap two phases at the system input and switch on again. Once the grid connects normally, 04 can be changed to APP: set ON/OFF to OFF, change 04 and switch ON/OFF on again.

minertech.org · MinerTech® trademark · © 2017–2026, all rights reserved
+38 093 293 93 93 · +38 099 054 40 38 · Specialist Pavlo Leonidovych · strooks@gmail.com

Three-phase settings

Menu items for three phases

Item	On the display	What to choose
27	PAn	Phase A inverter: **3P1,** phase B: **3P2,** phase C: **3P3.** If even one is set to SIG: fault **24;** if one of the modes 3P1–3P3 is missing: **24** on all of them.
28	PId	**AtO** (auto, default) or 1–9; the same number on two inverters gives fault 19.
30	POP	**OFF** (default) when there is a battery. ON: parallel with solar only, without a battery.
03	OPP	**GPB:** grid first (default) or PGB: solar first. **Do not choose PBG or MKS*:** in these the battery supplies the load even when the grid is present (see below).
04	nOd	**UPS:** for checking the phase sequence; once the grid connects normally, APP or UPS.
12 / 25	PuS / StE	Power saving and soft start do not work in parallel: **OFF.**
17	bAt	**FEL** (LiFePO4 16S, per the product description); for communication with the BMS the manual requires LIT or FEL (sect. 3.5.2). FEL factory voltages: charge 55.2 V (20), float 54.4 V (21), shutdown 42 V (19; here 46 V*). Inverter 1 takes the charge voltages from the BMS data; inverters 2 and 3 work on these settings (notes to items 20, 21). From the MFUZOP product description: recommended charge voltage 56.8–57.6 V (overcharge protection 58.4 V), deep discharge protection 43.2 V; the factory 55.2 V is lower, so we keep it, with a margin to 58.4 V*.
19	bAU	Shutdown on battery discharge: **46 V*** (FEL default 42 V, range 40–48 V) on all three. Inverters 2 and 3 switch off on voltage only (inverter 1 also on SOC, item 46: 20 %); the battery deep discharge protection is 43.2 V (per the product description): with 46 V the inverters stop before the BMS switches off the battery*.
44	bnS	Inverter 1 (BMS cable): PYL (PYLON, RS485): battery display: protocol setting → RS485-PCS → Pylon → Set (sect. 5.6 of battery manual *). Inverters 2 and 3: **OFF** (default)* or PYL if 44 synchronises with inverter 1 (p. 4, step 5)*
45	bnI	Inverter 1: AtO (auto, default); if P5 shows only 314 Ah: OVE* (p. 4)
07 / 06	nCC / tCC	Max. charge current / from the grid: 40 A / 40 A on each inverter* (factory 100 A / 60 A), up to 120 A in total*, ≈ 60 A per battery*, within the recommended 60–100 A per battery (per the product description) and 2 × 210 A per the rating plate. 07 also limits solar charging: in total ≈ 120 A × 51.2 V ≈ 6.1 kW*

Entering the menu: hold ENTER for 2 s, UP / DOWN to choose an item, ENTER, then UP / DOWN for the value, ENTER to save, ESC to exit. The items in this table are set while the ON/OFF switch is OFF (manual, 5.5.1, note 1; p. 2, step 4), and then switched back ON (5.5.1, step 6). The system determines the master and slave inverters itself; once the parallel system is set up, changes to other parameters on one inverter are picked up by the others automatically (manual, 5.5.1, note 3), so check items 19 and 44 per p. 4, step 5.

Parallel codes: 19: same number (ID); 20: communication failure; 21 / 22 / 23: different battery voltage / grid voltage / frequency between inverters; 24: different parallel modes, phase loss or an inverter in SIG mode; 25: loss of output synchronisation. Warning **ALA 56:** no communication with the BMS (p. 4).

Important about power. Discharge current for the whole system: two batteries in parallel, up to 2 × 210 A = 420 A* per the rating plate; per the product description, BMS 200 A, standard 157 A each. Three inverters: 19.5 kW rated, in parallel 95 % (datasheet) ≈ 18.5 kW*. When the grid fails, the whole load comes from the batteries: above solar generation, keep it continuously up to ≈ 14 kW* (2 × 157 A × 46–51.2 V × efficiency up to 94 %), briefly up to ≈ 18 kW* (420 A × 46 V × 94 %), i.e. almost the inverters' rated power (≈ 6.2 kW* per phase). The current is shared equally between the batteries only if the cables from the busbars to both batteries are identical in length and cross-section*. The full ≈ 18.5 kW* continuously only while the grid is on and item 03 = GPB (default) or PGB; do not choose PBG or MKS* (item 03 above). Before connecting the batteries, their voltages must be equal: charge each one separately* (p. 4, step 1); for even more capacity, add another battery in parallel* (per the rating plate up to 15).

minertech.org · MinerTech® trademark · © 2017–2026, all rights reserved
+38 093 293 93 93 · +38 099 054 40 38 · Specialist Pavlo Leonidovych · strooks@gmail.com

KIT CONNECTION GUIDE

2 × MFUZOP 16 kWh batteries: power cables, BMS and start-up

DC and communication diagram

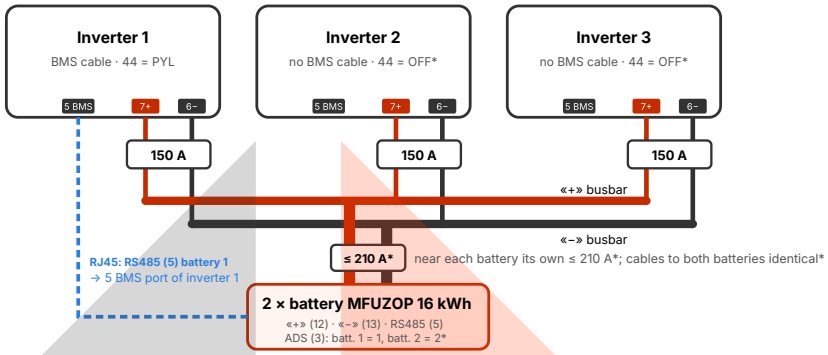

Connecting the battery to the system

1. Both batteries are off: breakers (15) OFF, DC breakers ≤ 210 A* (step 2) OFF. Set ADS (3): battery 1: DIP 1 = ON (address 1), battery 2: DIP 2 = ON, others OFF (address 2)*. Before connecting the batteries together, switch each one on separately (15, then 14) and measure the voltage at the terminals: the voltages must be equal*; if not, first charge each one fully on its own*.
2. Power cables: each inverter with a 25 mm² cable through its own 150 A protection to the common busbars; the cables are identical in length and cross-section (inverter manual). From the busbars to **each** battery its own cable rated for up to 210 A*, both identical*: «+» → terminal **«+» (12),** «–» → terminal **«–» (13);** near each battery a DC breaker or fuse ≤ 210 A* (the rating of the battery breaker (15) is illegible in the sources). Before switching on, check the polarity: «+» to «+», «–» to «–» (manual, p. 13).
3. Communication: RJ45 cable, straight (pin to pin; inverter BMS port: 1 = RS485B, 2 = RS485A): port **RS485 (5) of battery 1** → **5 BMS** port of inverter 1; inverters 2 and 3 have no BMS cable. Battery 1 ↔ battery 2: RJ45 cable between the RS485-1 / RS485-2 ports (8) on the right, either of the two; RS485 (5) of battery 2 stays free; the inverter sees both batteries through battery 1 (seller's data*). Set the Pylon protocol on the display of each battery: protocol setting → RS485-PCS → Set. CAN (6) and RS232 (7) are not needed*. The battery port pinouts are not given in the sources: if there is no battery data (step 6), contact the seller*.
4. Switching on and setup only per p. 2, steps 1–7 (including switching on both batteries: 15, then 14 per the battery manual, then the DC breakers ≤ 210 A*).
5. Check the settings from p. 2 (step 4): on all of them **03 = GPB** (or PGB), **17 = FEL, 19 = 46 V***, 07 / 06 = 40 A*; on inverter 1: **44 = PYL, 45 = AtO;** on 2 and 3: **44 = OFF***. The inverters synchronise parameters (manual, 5.5.1, note 3): if 2 or 3 now shows 44 = PYL with ALA 56, set OFF* there (ON/OFF = OFF, load off*, then ON again) and check inverter 1: **44 = PYL,** P3–P8 visible. If OFF has also carried over to inverter 1, set PYL back and leave PYL on all of them*: ALA 56 on 2 and 3 is only a warning; without BMS data an inverter works on its own voltage settings (manual, items 44, 20, 21).
6. Check: communication works if pages **P3–P8** (battery voltage, current, SOC) are visible on inverter 1 with UP / DOWN; ERR there or **ALA 56** means no communication (check the RJ45 cables, ADS and ports 5, 8, then contact the seller*); if there are no P3–P8 pages at all, inverter 1 has 44 = OFF (step 5). P5 should show a capacity of ≈ 628 Ah (both batteries*); if 314, the inverter sees only one: check the cable between ports 8 and ADS, then try 45 = OVE*. The battery voltage is the same on all three (otherwise fault 21, p. 3). If all is well, ON/OFF of all three to ON, then the load breakers (p. 2, step 6).

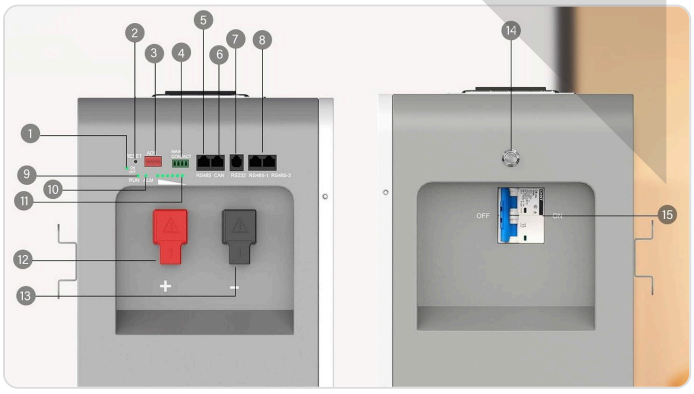

Battery panel: 1: ON/OFF indicator, 2: RESET, 3: ADS address switches, 4: MAIN CONTACT dry contact, 5: RS485, 6: CAN, 7: RS232, 8: RS485-1 / RS485-2, 9 / 10: RUN / ALM, 11: charge level, 12 / 13: «+» / «–» terminals, 14: power button, 15: breaker.

ADS (3) — battery 1*

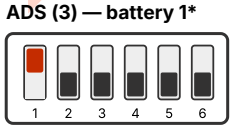

DIP 1 = ON (up) = address 1

ADS (3) — battery 2*

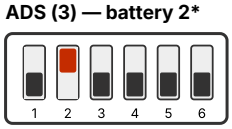

DIP 2 = ON, others OFF: address 2

Second battery (seller's data*): RJ45 between the (8) ports of both batteries (either of the two); RS485 (5) of battery 2 stays free.

minertech.org · MinerTech® trademark · © 2017–2026, all rights reserved
+38 093 293 93 93 · +38 099 054 40 38 · Specialist Pavlo Leonidovych · strooks@gmail.com