Hybrid solar inverter



ISolar-SMS-6.5KP-WiFi

Solar controller 120 A

Wide range PV voltage 60–500 V

27 A max. PV input

DUAL
Two AC outputs

Works with generator

BMS
Lithium and lead-acid batteries

Lithium battery activation

Grid feed-in

WiFi monitoring (option)

System diagram

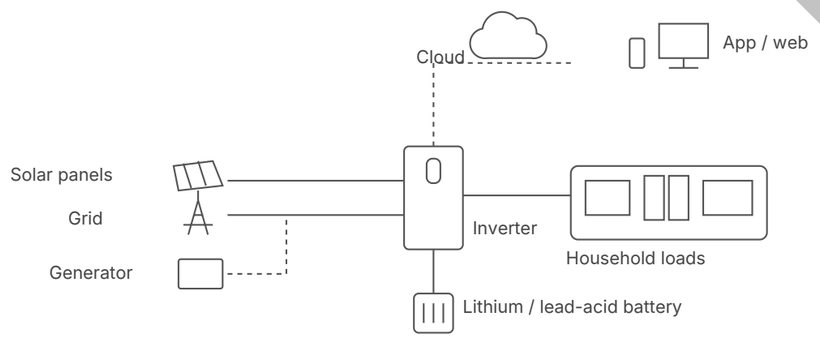

Technical specifications

Model	ISolar-SMS-6.5KP-WiFi
AC input	
Rated input voltage (V AC)	208 / 220 / 230 / 240; L + N + PE
Voltage range (V AC)	90~280±3 (normal mode); 170~280±3 (UPS mode)
Frequency (Hz)	50 / 60 (auto-detect)
AC output	
Rated power (kW)	6.5
Peak power (kVA)	12
Voltage (V AC)	208 / 220 / 230 / 240
Power factor (PF)	1
Frequency	50/60 Hz ±0.1%
Transfer time (ms)	10 (normal mode) / 10 (UPS mode)
Waveform	Pure sine wave
Overload capacity (on battery)	1 min at 102%~120%; 10 s at >120% load
Max. efficiency (battery)	94% at 48 V DC
Units in parallel	9
Charger (PV / AC)	
Solar controller type	MPPT
Max. PV input current / input power	27 A / 9000 W
MPPT operating range (V DC)	60~450
Max. PV open-circuit voltage (V DC)	500
Max. PV charge current (A)	120
Max. AC charge current (A)	120
Max. charge current (PV + AC) (A)	120
Battery	
Rated voltage (V DC)	48
Battery type	Lithium and lead-acid
Interfaces	
User interface	LCD display
Comm. ports	RS232 / RS485 / USB
Monitoring	WiFi (option)
General data	
Protection rating	IP21
Operating temperature	-10 °C ~ 60 °C
Relative humidity	5% ~ 95% (non-condensing)
Storage temperature	-15 °C ~ 60 °C
Net weight (kg)	9.4
Dimensions (W×H×D)	440×335×117 mm
Max. operating altitude	4000 m (derating above 1000 m)

minertech.org · MinerTech® trademark · © 2017–2026, all rights reserved
+38 093 293 93 93 · +38 099 054 40 38 · Specialist Pavlo Leonidovych · strooks@gmail.com