KIT CONNECTION GUIDE · IN ENGLISH

Kit GSIKE 11 kW 48 V + DATOU BOSS 51.2 V 100 Ah 5.12 kWh

What connects to what, in which order to switch on and what to set in the inverter

Kit contents

	Inverter GSIKE 11 kW	Battery DATOU BOSS
What it is	Hybrid inverter 11 kW, 48 V, Wi-Fi (GSK-11KP-48V-WIFI)	LiFePO4, 51.2 V 100 Ah, 3U rack
Power / energy	**11 kW**	**5.12 kWh,** max. load **5.12 kW**
Battery voltage	**48 V**	**51.2 V**
Current	max. battery current **220 A;** charging: F2-09 (default 80 A)	BMS **100 A**
BMS communication	**RS485 (BMS) (8),** RJ45 port; battery type: **F2-01.** There is no CAN port for the BMS	**RS485 (N)** port; also CAN (O)
Battery protection	separate DC breaker **250 A / 60 V (**the inverter kit includes a battery fuse)	**125 A** breaker on the panel (E)

Important about power. One battery delivers up to **5.12 kW (**BMS 100 A), while the inverter is rated for 11 kW. When the inverter runs on the battery only, keep the load up to 5.12 kW or add more batteries in parallel (up to 15 units). The inverter can deliver full power when there is grid or solar power.

Connection diagram

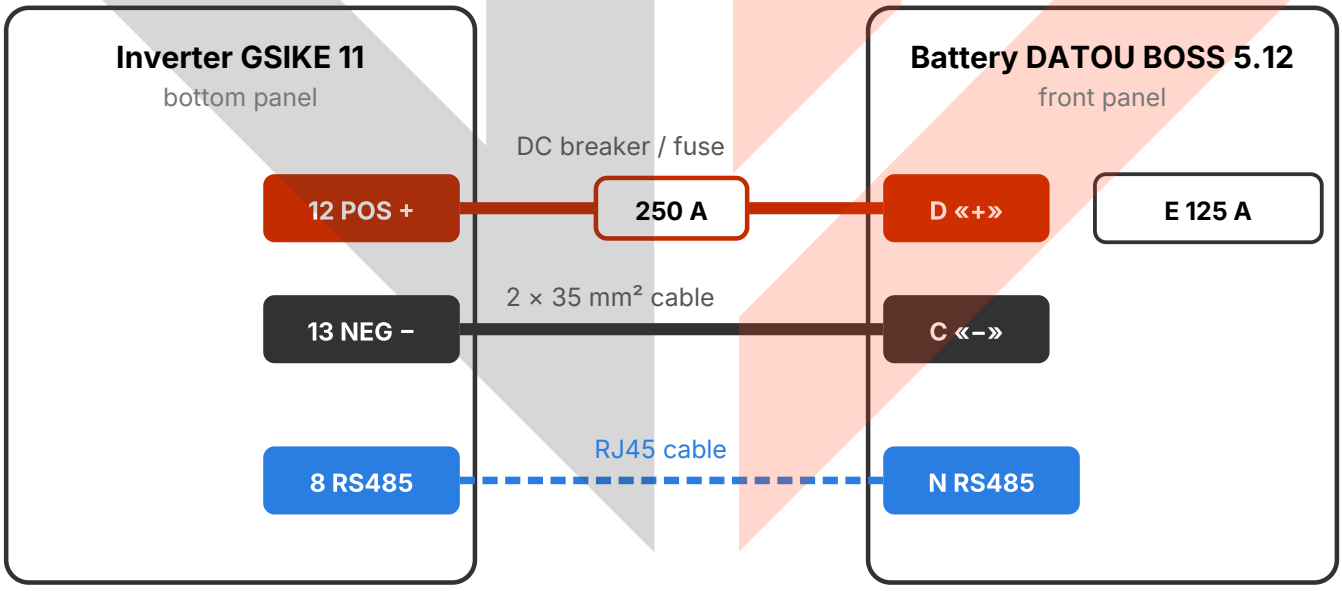

Numbers 8, 12, 13 are the connectors on the inverter's bottom panel (as in the photo on the next page and in the inverter manual); battery markings as in its manual. Connect the grid, loads and solar panels according to the inverter manual.

minertech.org · MinerTech® trademark · © 2017–2026, all rights reserved
+38 093 293 93 93 · +38 099 054 40 38 · Specialist Pavlo Leonidovych · strooks@gmail.com

KIT CONNECTION GUIDE

Where these connectors are

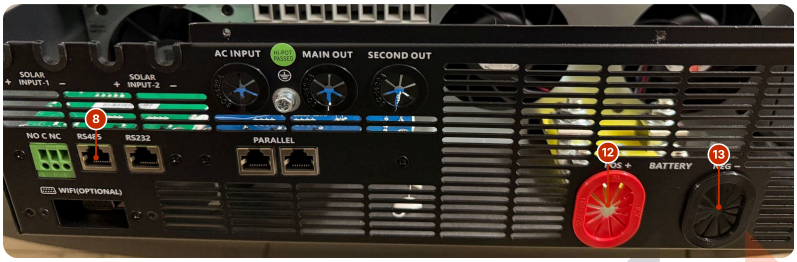

Inverter: photo of the underside: 8 — RS485 (BMS) port, 12 — battery “plus” cable entry (POS +), 13 — battery “minus” cable entry (NEG –). The terminals are under the terminal compartment cover.



Battery: “–” (C), “+” (D), 125 A breaker (E), power button (F), RS485 port (N), CAN (O). The RS485 ports (Q) are only for linking batteries.

Connection procedure

1. The inverter is off; the battery breaker and the DC breaker on the battery cable are off.
2. Negative cable: battery terminal **C “–”** → inverter **NEG –** terminal (13).
3. Positive cable via a separate **250 A / 60 V DC breaker:** battery terminal **D “+”** → inverter **POS +** terminal (12). Cable 2 × 35 mm², tightening torque 10–12 N·m. Check the polarity with a tester before switching on.
4. “Pin to pin” RJ45 communication cable (included with the inverter): inverter **RS485 (BMS) (8)** port → battery **N RS485** port.
5. Switch on the battery breaker (E) and power button (F), then the inverter.
6. In the **JBD BMS (**Bluetooth) app, select the battery protocol: Parameter → Inverter Protocol → **Pylon** or **Growatt.** The app and QR codes are in the battery manual.
7. In the inverter, select the same protocol in **F2-01** (table below). If communication is established, the “LI” icon flashes on the display.

Protocol: the same on the battery and in the inverter

Battery	What it is	What to choose for this kit
JBD BMS app: Inverter Protocol = Pylon (default)	Battery type, F2-01	**Li2 —** PYLON US2000 protocol
JBD BMS app: Inverter Protocol = Growatt	Battery type, F2-01	**Li4 —** manufacturer’s standard protocol of the inverter
Charging current	F2-09 (solar + grid)	**up to 100 A —** no higher than the battery BMS current (default 80 A)
Current from the grid	F2-10	default **60 A;** must be lower than F2-09

How to enter the menu: hold ENTER for 3 s and the F0–F4 group selection opens; select group F2 and program 01. When there is BMS communication, the inverter adjusts the charge voltage and current itself according to the BMS data, and the thresholds F2-05…F2-08 are set in percent of charge (factory 20 %, 30 %, 15 %, 10 %).

Warning 4B — communication with the BMS is broken. Check that the RJ45 cable is in the battery’s RS485 (N) port, and that the protocol in the JBD BMS app matches F2-01 (Pylon → Li2, Growatt → Li4).

minertech.org · MinerTech® trademark · © 2017–2026, all rights reserved
+38 093 293 93 93 · +38 099 054 40 38 · Specialist Pavlo Leonidovych · strooks@gmail.com