KIT CONNECTION GUIDE · IN ENGLISH

Kit ECGSOLAX 1 kW 12 V + POWLAND 12.8 V 300 Ah 3.84 kWh

What connects to what, in which order to switch on and what to set in the inverter

Kit contents

	Inverter ECGSOLAX 1 kW	Battery POWLAND
What it is	Hybrid inverter 1 kW, 12 V, pure sine wave	LiFePO4 (4S), 12.8 V 300 Ah
Power / energy	**1000 W**	**3.84 kWh;** BMS approx. **100 A (≈** 1.2–1.3 kW)
Battery voltage	**12 V**	**12.8 V**
Charging current	10–80 A (item 02, default 40 A)	recommended up to **60 A**
BMS communication	there is **no** BMS port or lithium type in the menu	**none:** only “+” and “–” terminals
Battery protection	DC protection / fuse in the “+” circuit (rating not given in the manual)	built-in BMS

Important about the battery type. The inverter manual describes only lead-acid batteries: the menu has AGn, FLd and the user-defined type **USE,** with no lithium type. For this LiFePO4 battery, select **USE** and set the voltages from the battery card (table on the next page). Neither the inverter nor the battery has BMS communication: only the “+” and “–” power cables are connected, and the battery is protected by its built-in BMS.

Connection diagram

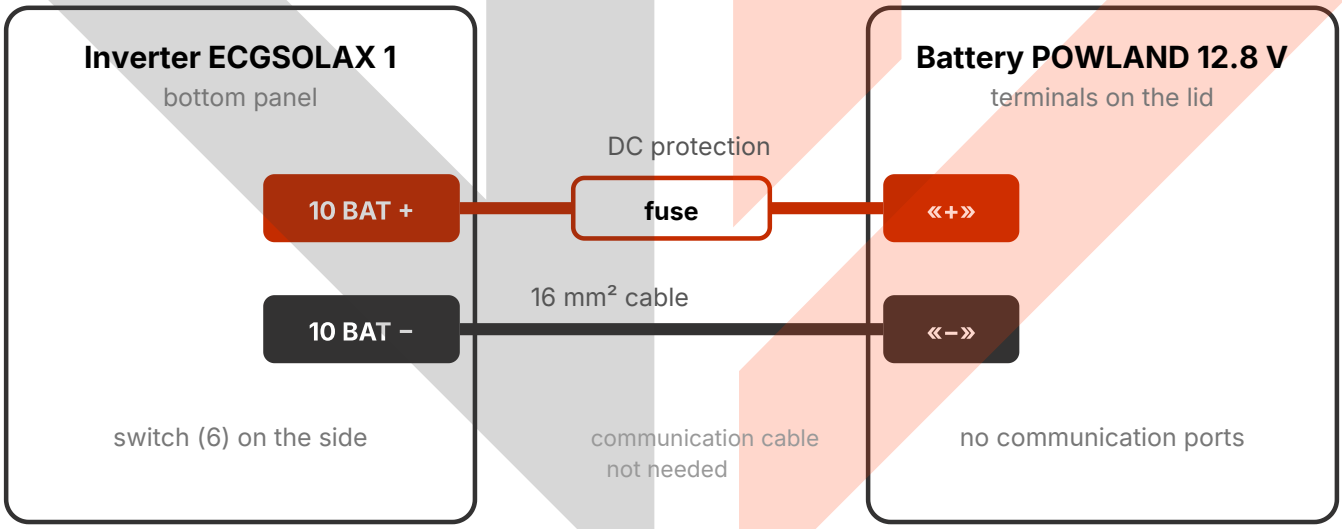

Number 10 is the BATTERY cable entry (+ and –) on the inverter’s bottom panel, 6 is the switch on the side panel (manual numbers, as in the photo on the next page). Connect the grid, loads and solar panels according to the inverter manual.

minertech.org · MinerTech® trademark · © 2017–2026, all rights reserved
+38 093 293 93 93 · +38 099 054 40 38 · Specialist Pavlo Leonidovych · strooks@gmail.com

KIT CONNECTION GUIDE

Where these connectors are





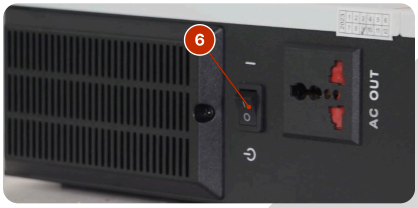

Battery: "+" and "−" terminals on the top lid, polarity marked on the case. There are no communication ports to the inverter.

Inverter: underneath, the BATTERY + and − cable entry (10) under the bottom cover; on the side panel, the switch (6). Numbers follow the manual's parts list.

Connection procedure

1. The inverter is switched off with the switch (6); the fuse / DC protection on the battery cable is off.
2. Remove the inverter's bottom cover. Strip the 16 mm² cables by 18 mm and crimp the lugs.
3. Negative cable: battery "−" terminal → inverter − BATTERY terminal (10).
4. Positive cable via the **fuse:** battery "+" terminal → inverter + BATTERY terminal (10). Tighten the inverter terminals to 2 N·m. Plus to plus, minus to minus: check with a tester before switching on.
5. Refit the bottom cover, switch on the fuse / DC protection, then the inverter with its switch (6).
6. Set up the inverter according to the table below. No communication cable is needed.

Inverter settings for this battery

Item	What it is	What to choose for this kit
05	Battery type	**USE —** user-defined (default AGn)
26	CV charge voltage	**14.2 V —** recommended battery charge voltage (default 14.1 V)
27	Float voltage	**13.6 V —** recommended battery float voltage (default 13.5 V)
29	Cut-off voltage	**12.0 V —** recommended battery cut-off voltage (default 10.0 V; for USE 10.0–12.0 V)
12	Switch to grid	per the manual: **11.5 V** by default, range 10.5–13.1 V, step 0.1 V (described for MKS mode in item 01)
02	Max. charge current (solar + grid)	**40 A (**default) or 60 A, no more than the battery's recommended charge current
30	Equalization charge	**EdS —** off (default); do not enable for a lithium battery

How to enter the menu: hold ENTER for 3 s, use UP / DOWN to select an item, ENTER to change, UP / DOWN for the value, ENTER to save, ESC to exit.

minertech.org · MinerTech® trademark · © 2017–2026, all rights reserved
+38 093 293 93 93 · +38 099 054 40 38 · Specialist Pavlo Leonidovych · strooks@gmail.com