KIT CONNECTION GUIDE · IN ENGLISH

3-phase kit 33 kW: 3 × GSIKE 11 kW 48 V

Three-phase parallel: how to connect three inverters, what to set and how to start, per the manufacturer's manual

Kit contents

	What is in the kit and what else you need
Inverters	**3 × GSIKE GSK-11KP-48V-WIFI:** hybrid inverters 11 kW, 48 V, Wi-Fi
Power	**33 kW** (3 × 11 kW): one inverter per phase L1, L2, L3, 230 V per phase; no more than 11 kW on one phase, so spread the load across the phases*; surge reserve 2 × rated power for 5 s. Below 55.0 V battery voltage the power is derated: to 0.75 of rated (8.25 kW per phase) at 42.0 V (manual, p. 33); at 51.2 V (LiFePO4 nominal) about 10.2 kW per phase, 30.6 kW per system*
Solar panels	**not included;** each inverter has 2 PV inputs of 5500 W (up to 500 V open-circuit, MPPT 60–500 V, up to 18 A), 6 inputs in total, up to 33 kW of panels*; each inverter connects to **its own** panels
Battery	**not included,** but required: the parallel system works only with a 48 V battery **shared** by all three inverters. Lithium: per the manual (p. 30) only one configured by the manufacturer and with a BMS cable; agree the battery model with the seller before buying*
Parallel cables	the ring needs 3 parallel communication cables. Per the manual (p. 3, 37) only the parallel model supports parallel operation: it has parallel ports (11 in the photo on p. 2), and the cable comes in the parallel kit. The kit contents do not list the cables: before installing, check ports 11 on all three and the 3 cables; if they are missing, do not install, contact the seller*
Breakers, cables, busbars	**not included:** 3 battery breakers 250 A / 60 V DC, 3 AC breakers 63 A, PV DC breakers, battery and AC cables, «+» and «–» busbars and two separate N busbars, input and output (p. 3 of this guide); with the inverter: 4 PV connectors and a battery fuse (manual, p. 4)

* = seller's recommendation or calculation, not in the manual.

What the manual says (p. 16, 37–43). Up to 6 inverters in parallel, for three phases up to 4 per phase; this kit follows the manual's separate "one inverter per phase" diagram. The parallel system works **only with a battery connected:** all inverters on the same battery bank, otherwise they go into fault mode. The second output (SECOND OUT) works only in a single system, so loads go on the main output (MAIN OUT) only.

AC diagram

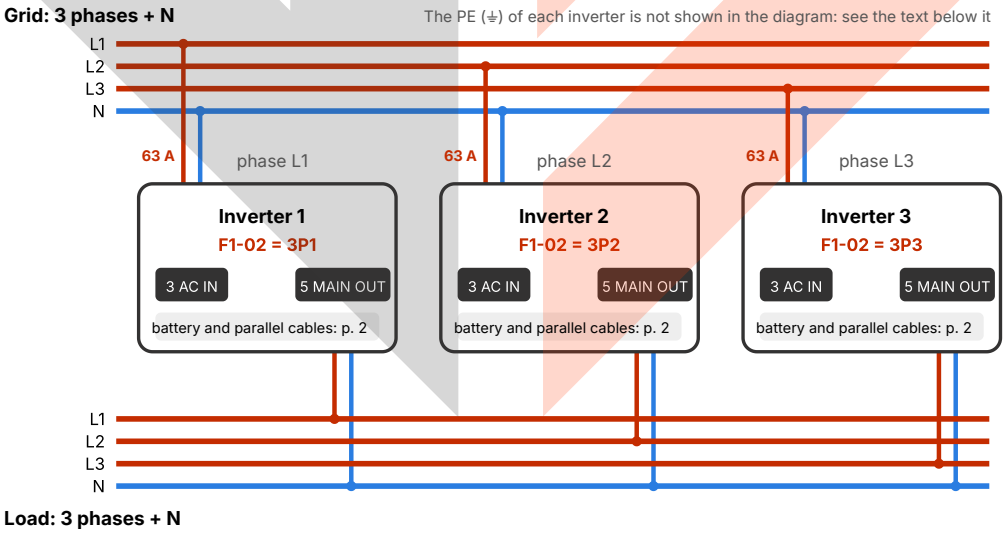

Per the manual's figure "One inverter in each phase" (p. 43): grid phase L1 → AC IN input (3) of inverter 1, set to F1-02 = 3P1; L2 → inverter 2 (3P2); L3 → inverter 3 (3P3); each input has its own 63 A breaker. The input neutrals (AC IN) of all inverters are connected together and to the grid N, the output neutrals (MAIN OUT) together and to the N of the load panel; input and output neutrals stay separate, as in the manual's figure. The MAIN OUT outputs (5) supply phases L1, L2, L3 of the panel: 230 V phase to neutral, 400 V between phases*. Numbers 3 and 5 are the cable entries on the bottom panel (photo on p. 2). **PE (⏚,** yellow-green) goes on the AC IN and MAIN OUT terminals of each inverter and is connected first; the earth terminal (4) of each inverter goes to a permanent earthing system (manual, p. 1, 7).

minertech.org · MinerTech® trademark · © 2017–2026, all rights reserved
+38 093 293 93 93 · +38 099 054 40 38 · Specialist Pavlo Leonidovych · strooks@gmail.com

Battery, BMS and parallel cables

DC and communication diagram: battery with BMS

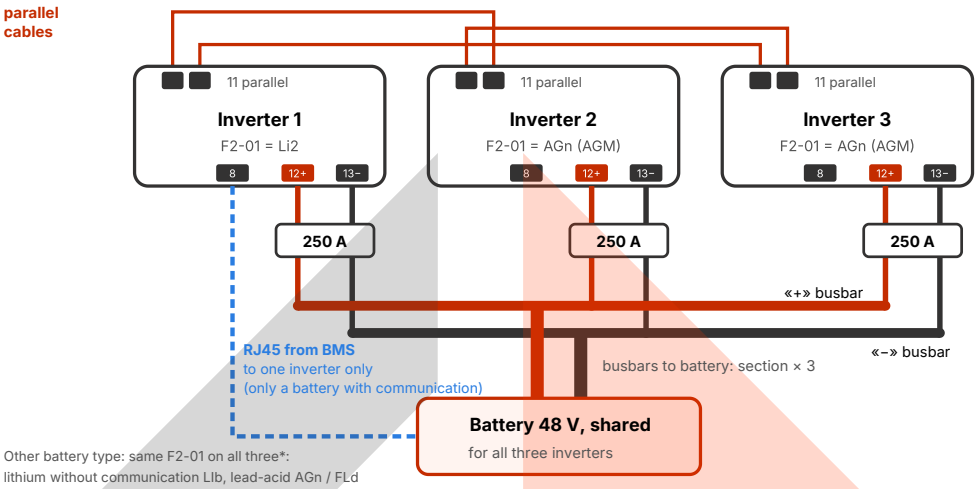

Each inverter connects to the **shared** battery with its own cables (entries 12 «+» and 13 «–») through its own two-pole **250 A / 60 V** DC breaker, as in the manual's figure (or one breaker per system: 3 × 250 A = 750 A; p. 38). The inverter cables have **the same length** and section and meet at the busbars; from the busbars to the battery the section is 3 times larger. **BMS** (battery with communication): an RJ45 cable from the battery RS485 port goes only to the RS485 port (8 in the photo) of one (any) inverter, pin to pin (p. 30: pins 1, 8 RS485-B, 2, 7 RS485-A; check against the battery port pinout*); only on this inverter F2-01 = **Li2** (p. 39; PYLON US2000 v3.5 protocol, p. 17), the other two keep **AGn (AGM),** otherwise fault E2. The manual does not describe Li4 in parallel: if the battery does not support PYLON, ask the seller first*. **Lithium battery without communication:** no BMS cable, F2-01 = **LIb** on all three* (manual, p. 32, method 1): charge F2-03, F2-04 56.4 V, back to grid F2-05 52.0 V, cut-off F2-07 51.9 V (p. 17–18); 56.4 V must not exceed your battery's max. charge voltage, and 51.9 V must be above its discharge protection*. Method 2 (p. 32, from BMS data): F2-03 = max. charge voltage – 0.5 V, F2-04 = F2-03, cut-off F2-07* ≥ discharge protection + 3 V, F2-05 ≥ cut-off + 2 V (otherwise a low battery voltage warning), 3 × F2-09 below the BMS max. charge current*; the same on all three*. F2-05 works only with SBU priority (F1-01; p. 15, 18); the factory 52.0 / 51.9 V do not follow the "+ 2 V" rule: with SBU raise F2-05 or lower F2-07*. The menu does not allow F2-03 below F2-04, nor F2-05 below F2-07 + 0.1 V (p. 17–18): when lowering, set F2-04 and F2-07 first; when raising, F2-03 and F2-05*. **Lead-acid battery:** F2-01 = **AGn** (AGM) or **FLd** (flooded), the same on all three*. **Manufacturer's restriction (p. 30):** only a lithium battery configured by the manufacturer may be used, with a BMS cable between battery and inverter; a lithium battery without communication (LIb) or with a non-PYLON BMS only after agreeing the model with the seller*.

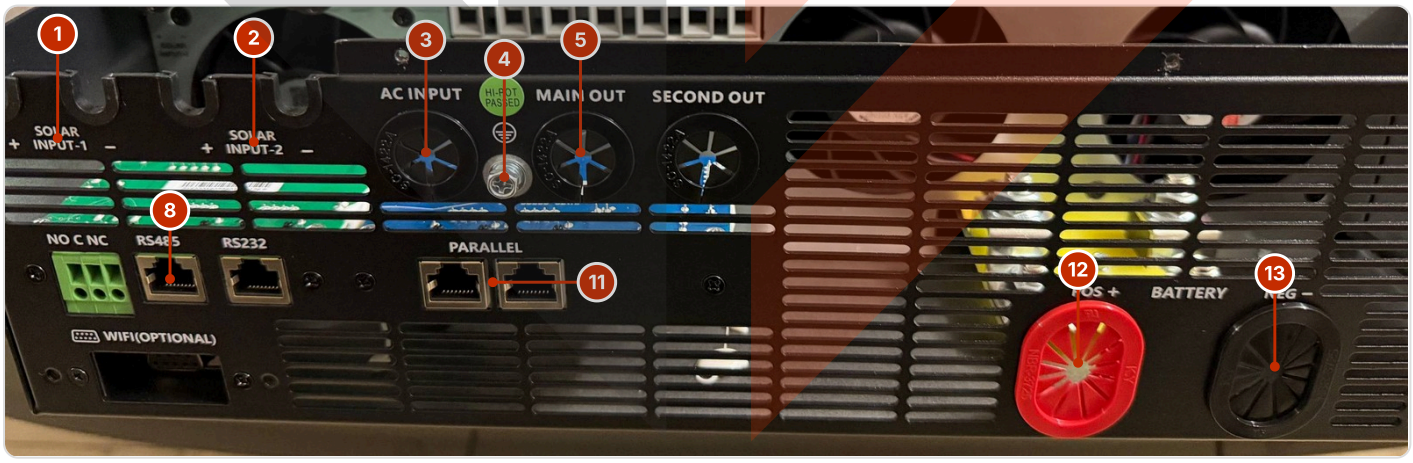

Bottom panel of each inverter: 1, 2 PV1 and PV2 inputs; 3 AC IN grid input; 4 earth; 5 main output MAIN OUT; 8 RS485 port for the BMS; 11 two parallel ports; 12, 13 battery «+» and «–» cable entries. The second output SECOND OUT does not work in parallel. Numbers follow this photo; the product overview in the manual (p. 3) numbers differently: parallel port 8, RS485 10.

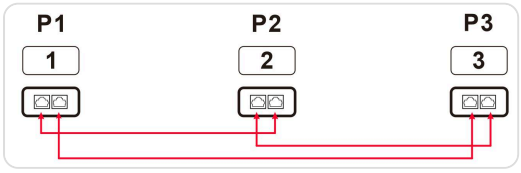

Figure from the manual (p. 43, "Communication Connection"): parallel cables between inverters P1, P2, P3; each port 11 is connected to the neighbour's port: a ring of three cables 1↔2, 2↔3, 3↔1.

minertech.org · MinerTech® trademark · © 2017–2026, all rights reserved
+38 093 293 93 93 · +38 099 054 40 38 · Specialist Pavlo Leonidovych · strooks@gmail.com

KIT CONNECTION GUIDE

Cables, breakers and installation

Cables and breakers (per the manual)

	Per inverter	For three inverters
Battery cable manual, p. 5, 38	per pole: 2 cables 50 mm²*; lug: hole 8.4 mm, 37 × 22 mm; torque 10–12 N·m; up to **220 A**	equal length; busbar to battery: section × 3
Battery discharge current manual, p. 5, 38	up to **220 A;** F2-25 (p. 20): the current above which the inverter stops discharging (factory: off)	up to 3 × 220 = **660 A*:** the battery bank BMS must handle this, otherwise limit the load and F2-25*
Battery breaker manual, p. 38	two-pole **250 A / 60 V** DC	or one of **750 A** (3 × 250 A); separate ones are better: each protects its own cable*
AC cable manual, p. 6, 38	input and output: 16 mm²*, torque 1.2–1.4 N·m	two separate N busbars: inputs (to grid N) and outputs (to panel N); from each: section × 3*
AC input breaker manual, p. 6, 39	**63 A** at the input of each inverter	each grid phase goes only to its own inverter
Solar panels manual, p. 8, 45	separate DC breaker; up to 500 V, 18 A per input; 6 mm²*, 1.4–1.6 N·m	one string cannot be shared between inverters
Battery capacity	**600 Ah** (manual, p. 5, 38)	parallel-mode table (p. 39): **1200 Ah;** by the value for 11 kVA: 3 × 600 = **1800 Ah***

Installation order

1. Hang the inverters on a concrete or other non-combustible wall **at the same level,** clearances 20 cm at the sides and 50 cm above and below (figure below). All breakers off.
2. Earth (4) of each inverter to a permanent earthing system; on the AC terminals connect the ⏚ (PE) wire first, then L and N.
3. Battery: «+» and «–» cables of each inverter (entries 12 and 13) through its own 250 A breaker to the common busbars, then the busbars to the battery. Check the polarity with a tester*. If the battery has several modules, measure and equalise their voltages before connecting them in parallel*.
4. Parallel cables in a ring between ports 11: 1↔2, 2↔3, 3↔1.
5. BMS (battery with communication): RJ45 cable from the battery RS485 port to the RS485 port (8 in the photo) of one inverter, e.g. 1.
6. Grid: L1, L2, L3 → AC IN (3) of inverters 1, 2, 3 through their own 63 A breakers; input neutrals together and to the grid N.
7. Loads: MAIN OUT (5) of inverters 1, 2, 3 → panel phases L1, L2, L3; output neutrals connected together and to the panel N (separate from the input neutral). Load breakers stay off for now.
8. Solar panels: each inverter to its own panels (inputs 1 and 2) through a separate DC breaker; switch the PV DC breakers on after start-up step 5*.

Manual diagram: one inverter per phase

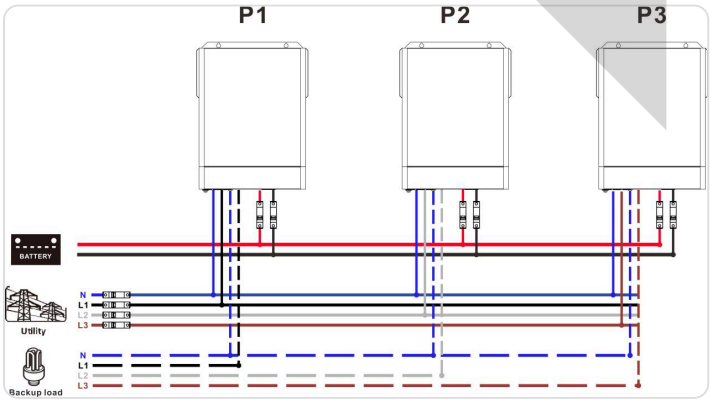

Manual, p. 43: BATTERY = shared battery, Utility = grid, Backup load = loads (dashed); P1–P3 = inverters of phases L1–L3.

Clearances

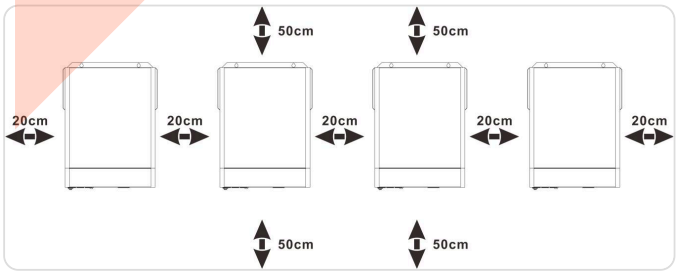

Manual, p. 37: 20 cm at the sides, 50 cm above and below, at the same level.

minertech.org · MinerTech® trademark · © 2017–2026, all rights reserved
+38 093 293 93 93 · +38 099 054 40 38 · Specialist Pavlo Leonidovych · strooks@gmail.com

Settings, start-up and codes

Settings for three phases

Program	What it is	What to choose
F1-02 manual, p. 15	Output mode: 3P1–3P3 = phases L1–L3	Inverter 1: **3P1** (phase L1), inverter 2: **3P2,** inverter 3: **3P3;** not SiG (single) and not PAL (parallel on one phase)
F2-01 manual, p. 17	Battery type	With a BMS cable: **Li2** (p. 39; PYLON US2000, p. 17) only on that inverter, the other two **AGn** (default); the manual does not describe Li4 in parallel*. Without communication: lithium **LIb** (p. 32; set points on p. 2 of this guide), lead-acid **AGn / FLd,** the same on all three*
F2-09 / F2-10 manual, p. 18	Charge current: solar + grid / grid only	default in parallel **30 A / 30 A;** F2-09 not below F2-10 (p. 18), so lower F2-10 first, then F2-09*. Total charge current up to 3 × F2-09 must stay below your battery's (BMS) max. charge current*
F1-11 manual, p. 16	Second output (OP2)	fixed to "disabled" in parallel
F0-02 / F0-03 manual, p. 13	Power saving / bypass on overload	in parallel only "off" / only "on"

Menu (manual, p. 12): hold **ENTER** 3 s for groups F0–F4; UP / DOWN to select; ENTER to confirm; ESC to go back or exit.

System start-up ("Commissioning" section)

1. Check the connections, PE (⏚) and earth (4); load breakers open, inverter neutrals connected. Check* that grid L1, L2, L3 go to inverters 1, 2, 3 (3P1–3P3 in step 2); swap phases only with the supply off*.
2. Power on/off switches of all inverters OFF*. Switch on the battery (lithium: its switch and start button), then the battery breakers. Set the programs while the display is lit and there is no output, otherwise they are not saved (p. 46, 32): on each, F1-02, F2-01, F2-10, F2-09 per the table (for method 2 with LIb also F2-03, F2-04, F2-05, F2-07 in the order from p. 2 of this guide). If the display is dark at OFF, do as in step 2 of the manual (p. 46): switch on, set the programs, switch off; after a restart check that the values were kept*.
3. Switch on all inverters (Power on/off). The master is chosen automatically: its "P" icon flashes, on the slaves it stays lit.
4. Switch on the AC input breakers, preferably all at once. Once the inverters see the grid, they work as usual.
5. If there are no fault signals, the system is installed; with a BMS cable the inverter set to Li2 shows the battery link icon (LI flashes, p. 24; battery icon lit, p. 31). Switch on the PV DC breakers*.
6. Switch on the load breakers: the system starts supplying the loads.

Parallel system codes (manual, p. 47)

Code	Meaning	What to do
E0 / E1	master / synchronisation data lost	check the parallel cables (ring of ports 11), restart the inverter
E2	incompatible battery type	lithium type (Li2) in F2-01 only on the inverter with the BMS cable, AGn on the others; E2 with LIb on all three: contact the seller*
E3	different firmware versions	on the main screen hold DOWN (p. 24) and compare the inverters' firmware versions; if they differ, contact the seller about the firmware
0E	warning: CAN communication lost	check the parallel cables, restart
1E	warning: different output mode	switch off, check F1-02 (3P1 / 3P2 / 3P3), switch on again*
2E	warning: different battery voltage on the inverters	all inverters on the shared battery; battery cables of equal length and material

minertech.org · MinerTech® trademark · © 2017–2026, all rights reserved
+38 093 293 93 93 · +38 099 054 40 38 · Specialist Pavlo Leonidovych · strooks@gmail.com