KIT CONNECTION GUIDE · IN ENGLISH

3-phase kit 33 kW + BRAUN 32 kWh

3 × GSIKE 11 kW 48 V and BRAUN Power 51.2 V 628 Ah cabinet: how to connect, what to set and how to start, per the manufacturers' manuals

Kit contents

	What is in the kit
Inverters	**3 × GSIKE GSK-11KP-48V-WIFI:** hybrid inverters 11 kW, 48 V, Wi-Fi; the manual allows up to 6 in parallel
Power	**33 kW** (3 × 11 kW): one inverter per phase L1, L2, L3, 230 V and up to 11 kW on each phase; spread the load across the phases*; surge reserve 2 × rated power for 5 s (from the grid; from the cabinet, see p. 5)*
Solar panels	each inverter has 2 PV inputs of 5500 W (up to 500 V open-circuit, MPPT 60–500 V, up to 18 A), 6 inputs in total and up to 33 kW of panels*. Each inverter connects to **its own** panels
Battery	**BRAUN Power 51.2 V 628 Ah 32 kWh** (LiFePO4, cabinet on wheels): one, **shared** by all three inverters (the parallel system works only with a battery); cabinet current: recommended **50 A,** max. **195 A** (≈ 10 kW*, p. 5)
Parallel cables	a ring of three inverters needs 3 parallel communication cables. Per the manual (p. 3) only the parallel model supports parallel operation: it has parallel ports (11 in the photo on p. 2); the parallel cable comes in the parallel model's box ("parallel kit", p. 37). Check that all three inverters have ports 11 and that there are 3 cables*

What the manual says. Up to 6 inverters in parallel; for three phases no more than 4 per phase, and the "one inverter per phase" diagram is described separately: this kit follows it. The parallel system works **only with a battery connected:** all inverters on the same battery bank, otherwise they go into fault mode. The second output (SECOND OUT) works only in a single system, so here loads go on the main output (MAIN OUT) only.

AC diagram

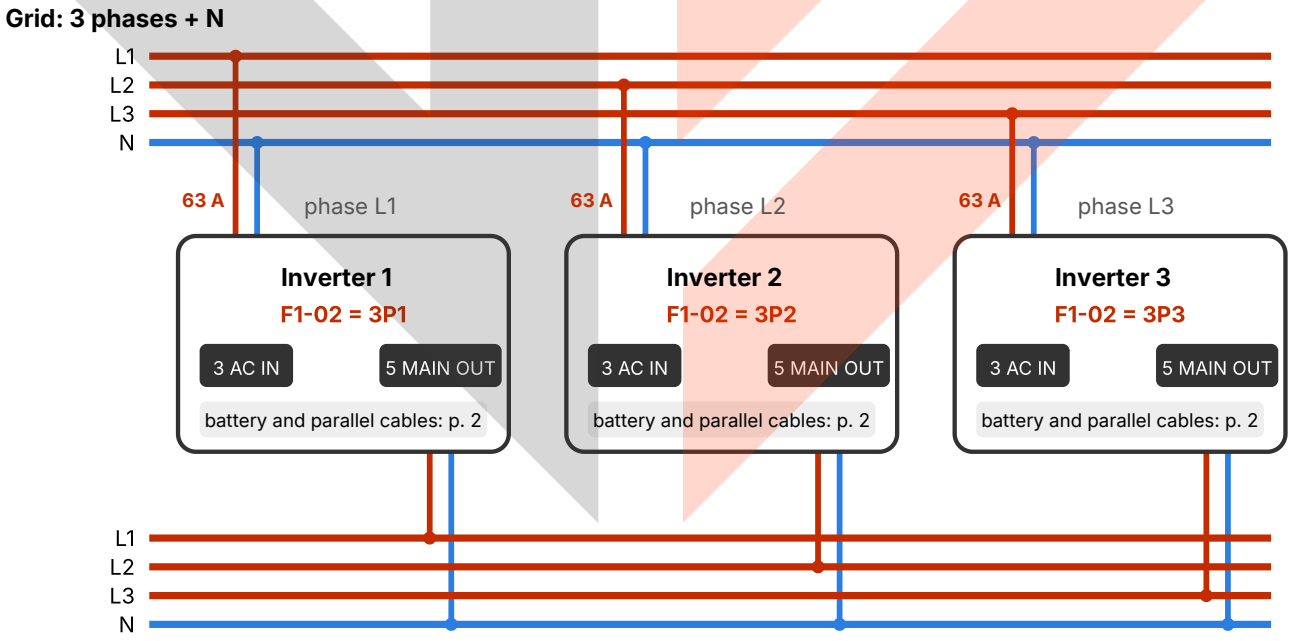

Per the manual's figure "One inverter in each phase" (p. 43): grid phase L1 → AC IN input (3) of inverter 1, set to F1-02 = 3P1; L2 → inverter 2 (3P2); L3 → inverter 3 (3P3). Each inverter input has its own 63 A breaker. The input neutrals (AC IN) of all inverters are connected together and to the grid N; the output neutrals (MAIN OUT) together and to the N of the load panel. Input and output neutrals stay separate, as in the manual's figure (p. 43). The MAIN OUT outputs (5) supply phases L1, L2, L3 of the load panel: 230 V phase to neutral, 400 V between phases*. Numbers 3 and 5 are the AC IN and MAIN OUT cable entries on the bottom panel (photo on p. 2). **Earth (PE) is not shown in the diagram:** on the AC IN and MAIN OUT terminals of each inverter connect the PE wire first, and the earth terminal (4) to the earthing system (p. 3, step 2).

minertech.org · MinerTech® trademark · © 2017–2026, all rights reserved
+38 093 293 93 93 · +38 099 054 40 38 · Specialist Pavlo Leonidovych · strooks@gmail.com

Battery, BMS and parallel cables

DC and communication diagram

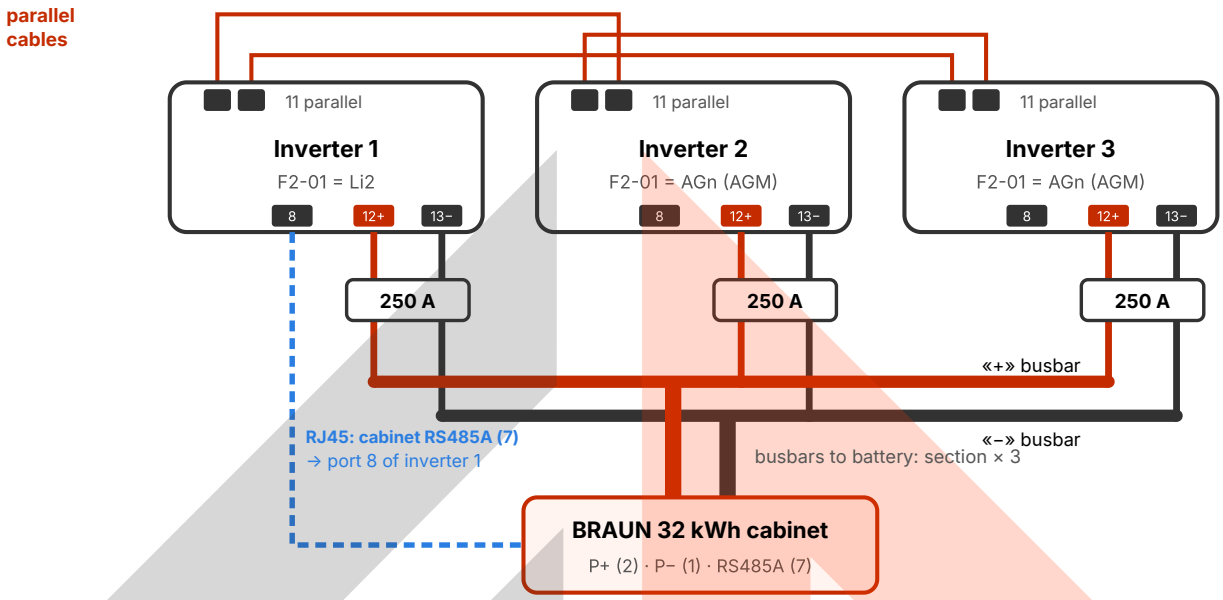

Each inverter connects to the **shared** battery with its own cables through entries 12 (+) and 13 (–) and its own two-pole **250 A / 60 V** DC breaker on «+» and «–», as in the manual's figure (or one breaker for the whole system: 3 × 250 A = 750 A). The inverter cables have **the same length** and section and meet at a busbar or connector; from the busbar to the battery the section is 3 times larger. **BMS:** an RJ45 cable from the cabinet's **RS485A (7)** port goes only to port 8 of one inverter (here inverter 1); on it F2-01 = **Li2,** the other two keep **AGn (AGM),** otherwise fault E2. In the cabinet, protocol UART1 = **014 (PYLON)** matches Li2 (p. 5). **Parallel:** three cables in a ring between ports 11: 1↔2, 2↔3, 3↔1, as in the manual's figure below.

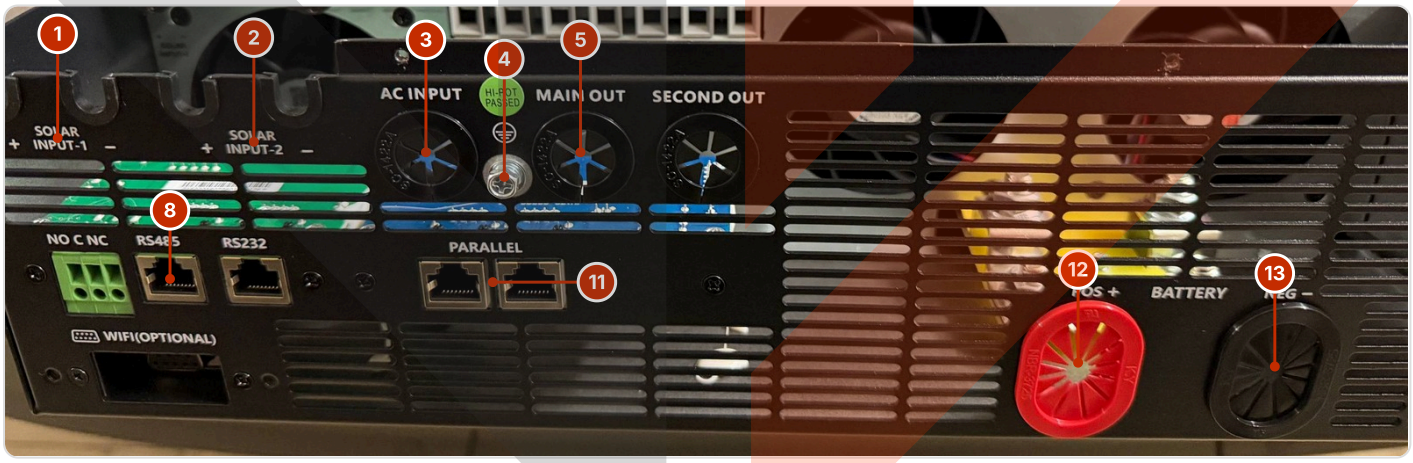

Bottom panel of each inverter: 1, 2 PV1 and PV2 inputs; 3 AC IN grid input; 4 earth; 5 main output MAIN OUT; 8 RS485 port for the BMS; 11 two parallel ports; 12, 13 battery «+» and «–» cable entries. The second output SECOND OUT does not work in parallel.

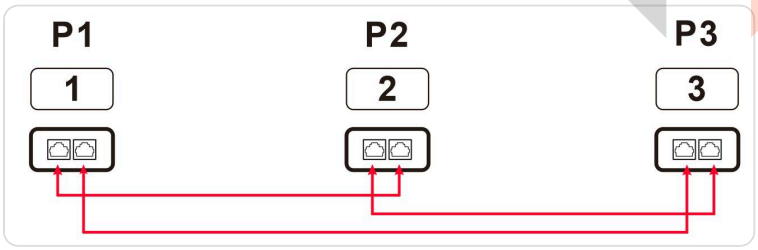

Figure from the manual (p. 43, "Communication Connection"): parallel cables between inverters P1, P2, P3; each port 11 is connected to the neighbour's port, making a ring of three cables.

Cables, breakers and installation

Cables and breakers (per the manual)

	Per inverter	For three inverters
Battery cable	per pole: 2 cables 50 mm²*; lug: hole 8.4 mm, 37 × 22 mm; torque 10–12 N·m; up to **220 A**	equal length; busbar to battery: section × 3; cable rated for 3 × 220 = **660 A*;** the BRAUN cabinet gives max. 195 A (p. 5)
Battery breaker	two-pole **250 A / 60 V** DC	or one of **750 A** (3 × 250 A); separate ones are better: each protects its own cable*
AC cable (input and output)	16 mm²*, torque 1.2–1.4 N·m	two separate N busbars: inputs (to grid N) and outputs (to panel N); from each: section × 3*
AC input breaker	**63 A** at the input of each inverter	each grid phase goes only to its own inverter
Solar panels	separate DC breaker; up to 500 V, 18 A per input; 6 mm²*, 1.4–1.6 N·m	one string cannot be shared between inverters
Battery capacity	—	the manual recommends **1200 Ah** (48 V) for three; the cabinet has 628 Ah (p. 5)

Installation order

1. Hang the inverters on a concrete or other non-combustible wall **at the same level,** clearances 20 cm at the sides and 50 cm above and below (figure below). All breakers off.
2. Earth (4) of each inverter to a permanent earthing system; on the AC terminals connect the ⏚ (PE) wire first, then L and N. The BRAUN cabinet: terminal (16) to the same earthing system* (p. 5).
3. Battery: «+» and «–» cables of each inverter (entries 12 and 13) through its own 250 A breaker to the common busbars, from the busbars to the cabinet terminals P+ (2) and P– (1) (p. 5). Check the polarity with a tester*.
4. Parallel cables in a ring between ports 11: 1↔2, 2↔3, 3↔1.
5. BMS: RJ45 cable from the cabinet's RS485A port (7) to port 8 of inverter 1 (p. 5).
6. Grid: L1 → AC IN (3) of inverter 1, L2 → inverter 2, L3 → inverter 3, each through its own 63 A breaker; input neutrals connected together and to the grid N.
7. Loads: MAIN OUT (5) of inverters 1, 2, 3 → panel phases L1, L2, L3; output neutrals connected together and to the panel N (separate from the input neutral). Load breakers stay off for now.
8. Solar panels: each inverter to its own panels (inputs 1 and 2) through a separate DC breaker; switch the PV DC breakers on after start-up step 5*.

Manual diagram: one inverter per phase

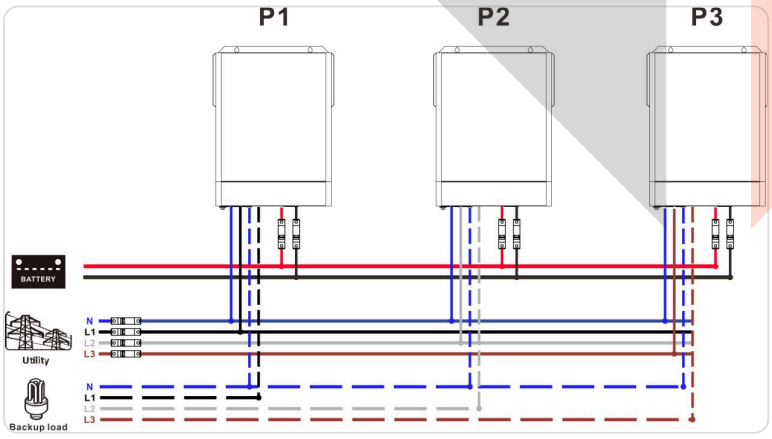

Manual, p. 43: BATTERY = shared battery, Utility = grid, Backup load = loads (dashed); P1–P3 = inverters of phases L1–L3, each with its battery breakers.

Clearances

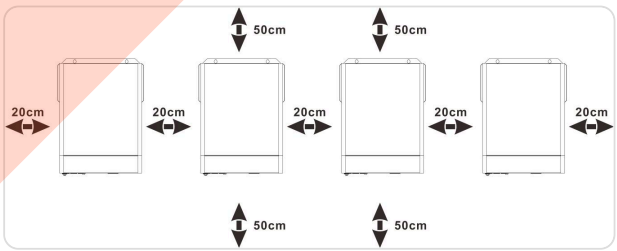

Manual, p. 37: 20 cm at the sides, 50 cm above and below, at the same level.

minertech.org · MinerTech® trademark · © 2017–2026, all rights reserved
+38 093 293 93 93 · +38 099 054 40 38 · Specialist Pavlo Leonidovych · strooks@gmail.com

Settings, start-up and codes

Settings for three phases

Program	What it is	What to choose
F1-02	Output mode	Inverter 1: **3P1** (phase L1), inverter 2: **3P2,** inverter 3: **3P3;** not SiG (single) and not PAL (parallel on one phase)
F2-01	Battery type	**Li2** (PYLON US2000; in the cabinet UART1 = 014) only on inverter 1 with the BMS cable; the other two **AGn (AGM),** the default; on them also F2-05 / F2-07, see p. 5*
F2-09 / F2-10	Charge current: solar + grid / grid only	default in parallel **30 A / 30 A.** For the BRAUN cabinet, on each: F2-09 = **16 A,** F2-10 = **15 A** (3 × 16 = 48 A ≈ 2.5 kW at the cabinet's recommended 50 A)*. This is the limit for inverters 2 and 3*; inverter 1 (Li2) may take its charge current from the BMS (manual, p. 30): see p. 5, step 7
F1-11	Second output (OP2)	fixed to "disabled" in parallel
F0-02 / F0-03	Power saving / bypass on overload	in parallel only "off" / only "on"

Entering the menu: hold **ENTER** 3 s to open the group choice F0–F4; UP / DOWN for the group, ENTER; then the program number and value, ENTER to confirm, ESC to go back or exit.

System start-up ("Commissioning" section)

1. Check all connections (cabinet: p. 5, steps 1–4). Load breakers open, neutrals of all inverters connected; inverter earth (4) and cabinet GND (16) connected. Check the grid phase order L1, L2, L3*.
2. Power on/off switches of all inverters OFF*. Switch on the BRAUN cabinet breaker (15), then the battery breakers: displays lit, outputs off; only like this, per the manual (p. 46, 32), are settings saved. On each, set F1-02, F2-01, F2-09, F2-10 per the table (on 2 and 3 also F2-05, F2-07*); if there is output voltage, switch the inverter off. In the JK BMS app: UART1 = 014 (p. 5, step 6).
3. Switch on all inverters with the Power on/off switches. The system chooses the master and slaves itself: on the master the "P" icon flashes on the display, on the slaves it stays lit.
4. Switch on the AC input breakers, preferably all at once. Once the inverters see the grid, they work as usual.
5. If there are no fault signals, the system is installed. Switch on the PV DC breakers (p. 3, step 8)*.
6. Switch on the load breakers: the system starts supplying the loads.

Parallel system codes

Code	Meaning	What to do
E0 / E1	master / synchronisation data lost	check the parallel cables (ring between ports 11), restart
E2	incompatible battery type	Li2 in F2-01 only on the inverter with the BMS cable, AGn (AGM) on the others
E3	different firmware versions	on the main screen hold DOWN and compare the firmware versions on all three; if they differ, contact the seller for firmware
0E	warning: CAN link lost between inverters	check the parallel cables, restart
1E	warning: different output mode	switch off the inverter, check F1-02 (3P1 / 3P2 / 3P3) and switch on again
2E	warning: different battery voltage on the inverters	all inverters on the shared battery; battery cables of equal length and material

minertech.org · MinerTech® trademark · © 2017–2026, all rights reserved
+38 093 293 93 93 · +38 099 054 40 38 · Specialist Pavlo Leonidovych · strooks@gmail.com

KIT CONNECTION GUIDE

BRAUN 32 kWh cabinet: connection and protocol

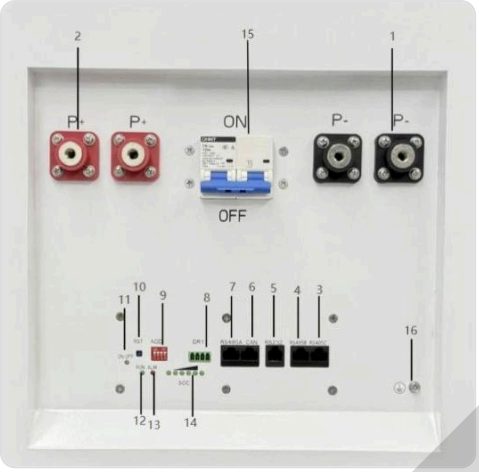

BRAUN cabinet panel

1: P– terminals (two), 2: P+ terminals (two), 3 / 4: RS485C / RS485B (between cabinets only), 5: RS232, 6: CAN, 7: **RS485A** (link to the inverter), 8: dry contact, 9: ADD address switches, 10: RST reset button, 11 / 12 / 13: power (ON/OFF), run (RUN) and alarm (ALM) LEDs, 14: SOC charge level, 15: breaker, 16: earth.

	BRAUN Power cabinet
Capacity	**32 kWh,** 51.2 V 628 Ah, LiFePO4 (1P16S)
Current	recommended **50 A,** max. **195 A** (≈ 10 kW*)
Link to the inverter	RS485A (7), protocol UART1 = **014 (PYLON) ↔** F2-01 = **Li2**

Connecting the cabinet to the system

1. The cabinet is off: breaker (15) OFF. Address switches **ADD (9):** all OFF (address 0, one cabinet).
2. Cabinet earth: terminal **GND (16)** to the same earthing system as the inverters*.
3. Power cables from the common busbars (p. 2): «+» → terminals **P+ (2),** «–» → terminals **P– (1);** two terminals per pole, use both*. The section from the busbars to the cabinet is 3 times larger than from one inverter (inverter manual, p. 38; diagram on p. 2).
4. RJ45 cable (straight, inverter manual p. 30): cabinet port **RS485A (7)** → port **8** (BMS) **of inverter 1;** CAN (6) and RS485B / C are not needed.
5. Switching on (p. 4, steps 1–2): inverter Power on/off switches OFF, then the cabinet breaker (15), then the battery breakers.
6. **JK BMS** app (Bluetooth): Settings → **UART1 Protocol No. → 014 (9600) PYLON →** OK, before start-up step 3 (p. 4). App passwords: login (Android) 1234, settings change 888888 (BRAUN battery manual, p. 3).
7. Check (set before start-up, p. 4, step 2): inverter 1 **F2-01 = Li2,** inverters 2 and 3 AGn (AGM); on each F2-09 = 16 A, F2-10 = 15 A*; on 2 and 3 F2-05 / F2-07 (below)*. If the BMS link works, the **"Li"** icon is lit or flashing on inverter 1 (p. 24, 31). The BMS may set the charge current of inverter 1 (p. 30): look at item 13 on its display, max. charge voltage and current from the BMS (p. 24). If the current is over 16 A, total charging will exceed 48 A* (at most 160 A (p. 35) + 2 × 16 A = 192 A*, within the cabinet's 195 A); to keep to the recommended 50 A, ask the seller about the charge limit in JK BMS*.

Important about power. The cabinet gives up to **195 A** (× 51.2 V ≈ 10 kW*; with inverter efficiency up to 94 %, ≈ 9 kW at the output*) for the whole system, while the three inverters give 33 kW. Without the grid keep the load above solar production to ≈ 9 kW*; the full 33 kW only with the grid at F1-01 = SUB (default)*. The inverter manual recommends a **1200 Ah** battery for three inverters, the cabinet has 628 Ah: to draw more from the battery, add cabinets in parallel*; before connecting them equalise their voltages*, ADD addresses 1–15, RS485B / C link, BMS cable only from the master (BRAUN manual, p. 4).

Cut-off of inverters 2 and 3. The manual does not say whether they (AGn) receive BMS data in parallel; if not, they stop discharging by voltage: F2-07 44.0 V (p. 18), the AGM table down to 41.6 V from 50 % load (p. 34), below the cabinet protection of 43.2 V*. Then the cabinet BMS trips and disconnects the shared battery from all three inverters, and the parallel system works only with a battery (p. 38): expect all three phases to go off*. So on inverters 2 and 3 first set **F2-05 = 48.2 V,** then **F2-07 = 46.2 V*,** per the manual's rule for lithium without communication (p. 32: cut-off ≥ BMS protection + 3 V, F2-05 ≥ cut-off + 2 V); the menu allows this with AGn (p. 18). The manual does not say whether F2-07 overrides the table on p. 34: under heavy load on L2 / L3 do not discharge the cabinet below ≈ 20 % SOC*.

Discharge current. The discharge cut-off threshold is **F2-25,** the battery max. discharge current (50–500 A, default OFF): when exceeded, the inverter stops discharging and goes to bypass or standby (inverter manual, p. 20), probably with warning 5B (p. 27)*; without the grid its phase goes off*. It is a cut-off, not a limiter: at 65 A on each (3 × 65 = 195 A)*, without the grid a phase load above ≈ 3 kW or an appliance's inrush current will switch the phase off*. The manual does not describe how F2-25 works in parallel.

Warning 4B: the BMS link is broken. Check that the RJ45 cable is in the cabinet's RS485A port (7) and in port 8 of inverter 1, address ADD = 0, and in JK BMS UART1 = 014. **E2:** Li2 is set not only on inverter 1.

minertech.org · MinerTech® trademark · © 2017–2026, all rights reserved
+38 093 293 93 93 · +38 099 054 40 38 · Specialist Pavlo Leonidovych · strooks@gmail.com