KIT CONNECTION GUIDE · IN ENGLISH

3-phase kit 33 kW + 2 × MFUZOP 16 kWh

3 × GSIKE 11 kW 48 V and two MFUZOP 51.2 V 314 Ah batteries: how to connect, what to set and how to start, per the manufacturers' manuals; seller's decisions are marked *

Kit contents

	What is in the kit
Inverters	**3 × GSIKE GSK-11KP-48V-WIFI:** hybrid, 11 kW, 48 V, Wi-Fi; the manual allows up to 6 in parallel
Power	**33 kW** (3 × 11 kW): one inverter per phase L1, L2, L3, 230 V per phase; up to 11 kW on one phase, so spread the load across the phases*; surge reserve 2 × rated power for 5 s
Solar panels	each inverter has 2 PV inputs of 5500 W (up to 500 V open-circuit, MPPT 60–500 V, up to 18 A), 6 inputs in total and up to 33 kW of panels*. Each inverter connects to **its own** panels
Batteries	**2 × MFUZOP 51.2 V 314 Ah 16.07 kWh** (LiFePO4 16S, from the product description) in parallel: **32.14 kWh*** in total, 628 Ah*, **shared** by all three inverters (the parallel system works only with a battery); max. current of each 210 A per the rating plate (p. 5). BMS link: RS485 from battery 1 to inverter 1, battery 2 by cable to battery 1*, Pylon protocol* (F2-01 = Li2, p. 2, 4, 5)
Parallel cables	a ring of three inverters needs 3 parallel communication cables (manual figure, p. 43). Per the manual (p. 37) this cable comes in the manufacturer's parallel kit, and an inverter with it supports parallel operation. Check that there are 3 cables and that all three inverters have parallel ports 11 (photo on p. 2)*

What the manual says. Up to 6 inverters in parallel; for three phases no more than 4 per phase, and the "one inverter per phase" diagram is described separately: this kit follows it. The parallel system works **only with a battery connected:** all inverters on the same battery bank, otherwise they go into fault mode. The second output (SECOND OUT) works only in a single system, so here loads go on the main output (MAIN OUT) only.

AC diagram

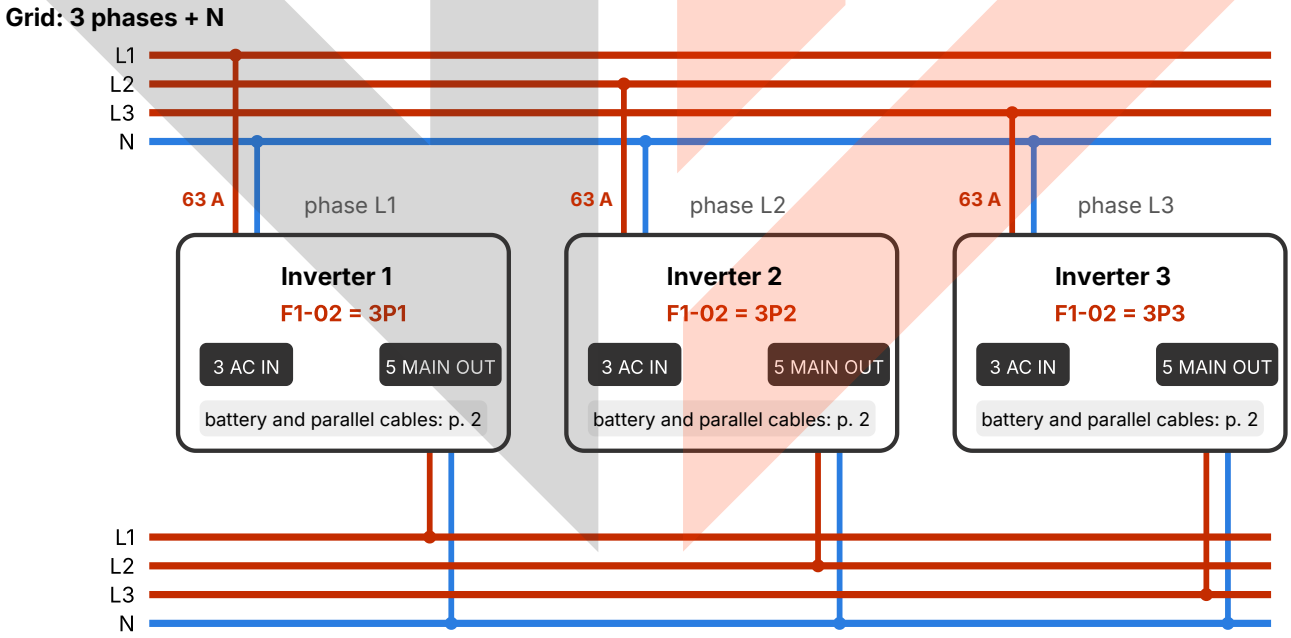

Per the manual's figure "One inverter in each phase" (p. 43): grid phase L1 → AC IN input (3) of inverter 1, set to F1-02 = 3P1; L2 → inverter 2 (3P2); L3 → inverter 3 (3P3). Each inverter input has its own 63 A breaker. The input neutrals (AC IN) of all inverters are connected together and to the grid N; the output neutrals (MAIN OUT) together and to the panel N, separate from the input neutrals (manual figure, p. 43). The MAIN OUT outputs (5) supply phases L1, L2, L3 of the panel: 230 V phase to neutral, 400 V between phases*. Numbers 3 and 5 are the AC IN and MAIN OUT entries on the bottom panel (photo on p. 2). **PE** is not shown in the diagram (nor in the manual's figure) but is mandatory: the earth terminal (4) of each inverter to the earthing system, and on the AC IN and MAIN OUT terminals the PE (⏚) wire first (manual, p. 7; p. 3, step 2).

minertech.org · MinerTech® trademark · © 2017–2026, all rights reserved
+38 093 293 93 93 · +38 099 054 40 38 · Specialist Pavlo Leonidovych · strooks@gmail.com

Batteries, BMS and parallel cables

DC and communication diagram

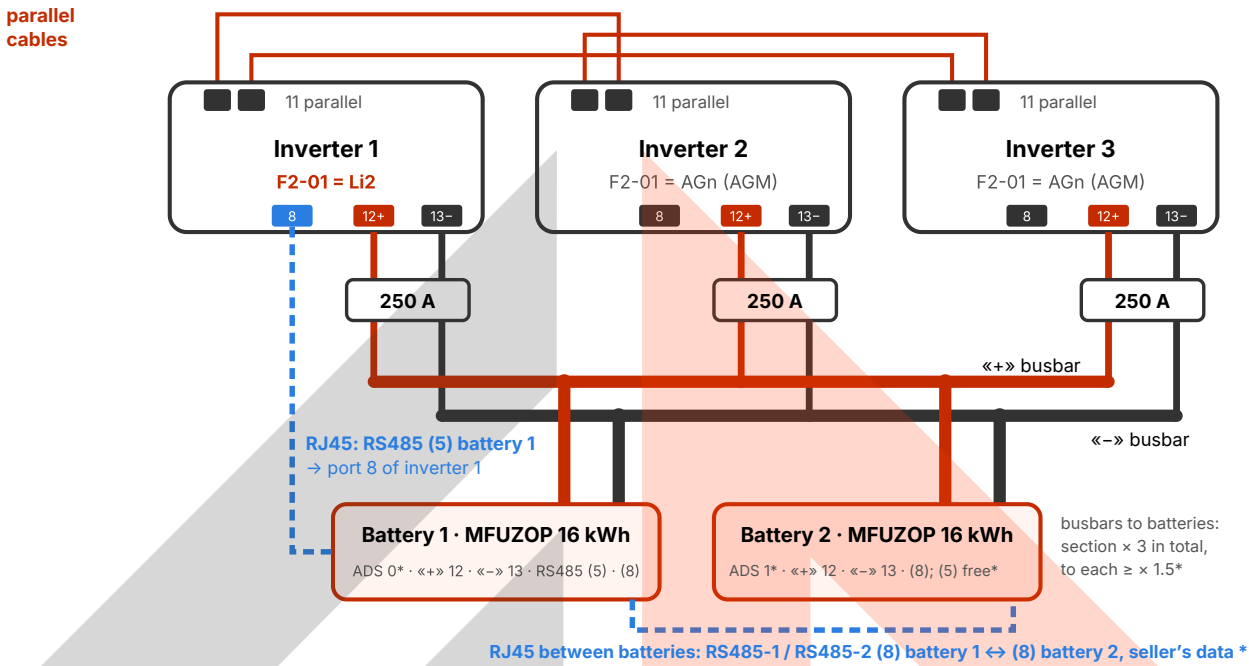

Each inverter connects to the **shared** batteries with its own cables through entries 12 (+) and 13 (–) and its own two-pole **250 A / 60 V** DC breaker on «+» and «–», as in the manual's figure (or one breaker for the whole system: 3 × 250 A = 750 A). The inverter cables have **the same length** and section and meet at a busbar or connector; from the busbar to the batteries the section is 3 times larger (manual, p. 38). **BMS:** an RJ45 cable from the **RS485 (5)** port of battery 1 goes only to port 8 of one inverter (here inverter 1); on it F2-01 = **Li2** (PYLON protocol), the other two keep **AGn (AGM),** as the manual requires (p. 39), otherwise fault E2. Battery display: Pylon protocol (sect. 5.6), ADS addresses (3): battery 1 1, battery 2 2; the batteries are linked by an RJ45 cable between ports RS485-1 / RS485-2 (8), RS485 (5) of battery 2 stays free: the inverter receives the data of both batteries via battery 1 (seller's data *, p. 5, steps 1, 4). **Parallel:** three cables in a ring between ports 11: 1↔2, 2↔3, 3↔1, as in the manual's figure below.

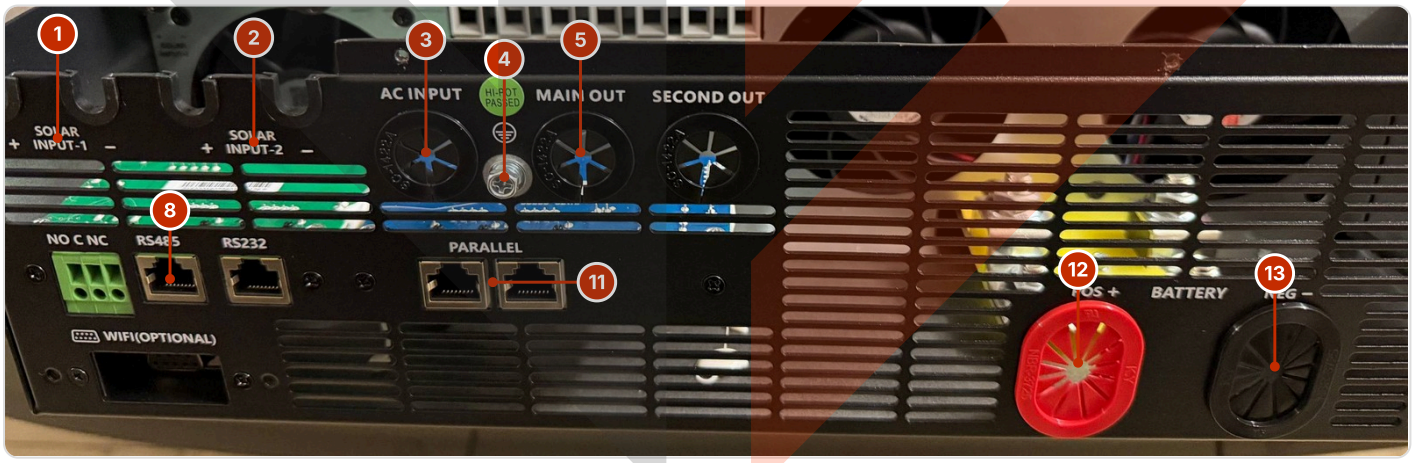

Bottom panel of each inverter: 1, 2 PV1 and PV2 inputs; 3 AC IN grid input; 4 earth; 5 main output MAIN OUT; 8 RS485 port for the BMS; 11 two parallel ports; 12, 13 battery «+» and «–» cable entries. The second output SECOND OUT does not work in parallel.

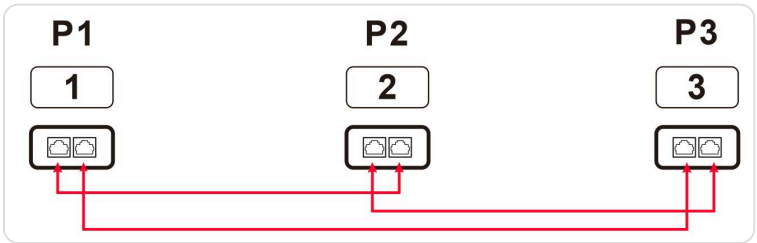

Figure from the manual (p. 43, "Communication Connection"): parallel cables between inverters P1, P2, P3; each port 11 is connected to the neighbour's port, making a ring of three cables.

minertech.org · MinerTech® trademark · © 2017–2026, all rights reserved
+38 093 293 93 93 · +38 099 054 40 38 · Specialist Pavlo Leonidovych · strooks@gmail.com

KIT CONNECTION GUIDE

Cables, breakers and installation

Cables and breakers (per the manual)

	Per inverter	For three inverters
Battery cable	per pole: 2 cables 50 mm²*; lug: hole 8.4 mm, 37 × 22 mm; torque 10–12 N·m; up to **220 A**	equal length; busbar to battery: section × 3; cable rated for 3 × 220 = **660 A*;** the two batteries give up to 420 A* together (p. 5)
Battery breaker	two-pole **250 A / 60 V** DC	or one of **750 A** (3 × 250 A); separate ones are better: each protects its own cable*
AC cable	16 mm²*, torque 1.2–1.4 N·m	N neutrals on a busbar, from it: section × 3
AC input breaker	**63 A** at the input of each inverter	each grid phase goes only to its own inverter
Solar panels	separate DC breaker; up to 500 V, 18 A per input; 6 mm²*, 1.4–1.6 N·m	one string to one inverter only
Communication cables	BMS: RJ45 from the inverter box (p. 30), inverter 1 only: port 8 ← RS485 (5) of battery 1	between batteries: RJ45, RS485-1 / RS485-2 (8) battery 1 ↔ (8) battery 2, seller's data * (p. 5)
Battery capacity	—	the manual recommends **1200 Ah** (48 V) for three; the two batteries have 628 Ah* (p. 5)

Installation order

1. Hang the inverters on a concrete or other non-combustible wall **at the same level,** clearances 20 cm at the sides and 50 cm above and below (figure below). All breakers off.
2. Earth (4) of each inverter to a permanent earthing system; on the AC terminals connect the ⏚ (PE) wire first, then L and N.
3. Batteries: **first,** with them off, set ADS (3): battery 1 = 0, battery 2 = 1 (p. 5, step 1)*, then the voltage of each separately (p. 5, step 2)*. Inverter entries 12 (+) and 13 (–) through its own 250 A breaker to the common busbars, from the busbars to «+» (12) and «–» (13) of both batteries (if voltages differ, only one, p. 5, steps 2–5)*. Polarity: with a tester*.
4. Parallel cables in a ring between ports 11: 1↔2, 2↔3, 3↔1.
5. BMS: RJ45 from RS485 (5) of battery 1 into port 8 of inverter 1; battery 1 ↔ battery 2: RJ45 between ports 8 (p. 5)*.
6. Grid: L1 → AC IN (3) of inverter 1, L2 → inverter 2, L3 → inverter 3, each through its own 63 A breaker; input neutrals connected together and to the grid N.
7. Loads: MAIN OUT (5) of inverters 1, 2, 3 → panel phases L1, L2, L3; output neutrals connected together and to the panel N (separate from the input neutral). Load breakers stay off for now.
8. PV: each inverter to its own panels (inputs 1, 2) through a separate DC breaker; switch on after start-up step 5*.

Manual diagram: one inverter per phase

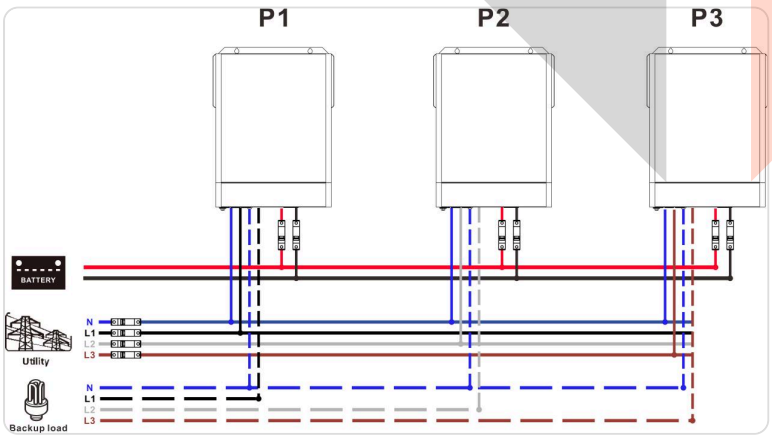

Manual, p. 43: BATTERY = shared battery, Utility = grid, Backup load = loads; P1–P3 = inverters L1–L3.

Clearances

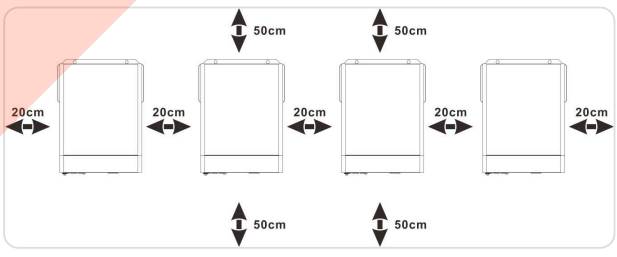

Manual, p. 37: 20 cm at the sides, 50 cm above and below, at the same level.

minertech.org · MinerTech® trademark · © 2017–2026, all rights reserved
+38 093 293 93 93 · +38 099 054 40 38 · Specialist Pavlo Leonidovych · strooks@gmail.com

Settings, start-up and codes

Settings for three phases

Program	What it is	What to choose
F1-02	Output mode	Inverter 1: **3P1** (phase L1), inverter 2: **3P2,** inverter 3: **3P3;** not SiG (single) and not PAL (parallel on one phase)
F2-01	Battery type	**Li2** (PYLON US2000 protocol) only on inverter 1 with the BMS cable; the other two **AGn (AGM),** the default (manual, p. 39). The manual does not say whether 2 and 3 receive BMS data; if not, they cut off by voltage (F2-07 44.0 V, p. 18; AGM table down to 41.6 V, p. 34), below the battery protection of 43.2 V*: the BMS would then disconnect the shared batteries and all three phases go off*. So on 2 and 3 first F2-05 = **48.2 V,** then F2-07 = **46.2 V*** (rule on p. 32: protection + 3 V, then + 2 V; the menu allows it with AGn, p. 18)
F2-09 / F2-10	Charge current: solar + grid / grid only	default in parallel 30 A / 30 A. Here on each F2-09 = **60 A*,** F2-10 = 30 A, up to 180 A* in total, ≈ 90 A per battery* (within 60–100 A from the product description). For inverter 1 (Li2) the BMS may set the charge current (p. 30): p. 5, step 6
F1-11	Second output (OP2)	fixed to “disabled” in parallel
F0-02 / F0-03	Power saving / bypass on overload	in parallel only “off” / only “on”

Menu: hold ENTER 3 s for groups F0–F4; UP / DOWN to choose the group, program, value; ENTER to confirm, ESC to go back.

System start-up (“Commissioning” section)

1. Check all connections, including the earth (4) and PE on the AC terminals*. Load breakers open, neutrals of all inverters connected. Check the grid phase order L1, L2, L3* (swap phases only with no voltage*).
2. Power on/off switches of all inverters OFF. ADS addresses set* (p. 5, steps 1, 5). Switch on both batteries (if voltages differ, one, p. 5, steps 2–5*): breaker (15), button (14), then the inverters’ battery breakers: displays lit, outputs off; only like this are settings saved (manual, p. 46). On each, set F1-02, F2-01, F2-09, F2-10 per the table (on 2 and 3 also F2-05, F2-07*); if there is output voltage, switch the inverter off.
3. Switch on all inverters with the Power on/off switches. The system chooses the master and slaves itself: on the master the “P” icon flashes on the display, on the slaves it stays lit.
4. Switch on the AC input breakers, preferably all at once. Once the inverters see the grid, they work as usual.
5. If there are no fault signals, the system is installed (“Li” flashes on inverter 1, p. 5, step 6). Switch on the PV DC breakers (p. 3, step 8)*, only once both batteries are connected (p. 5, step 5)*.
6. Switch on the load breakers: the system starts supplying the loads.

Parallel system codes

Code	Meaning	What to do
E0 / E1	master / synchronisation data lost	check the parallel cables (ring between ports 11) and restart the inverter
E2	incompatible battery type	Li2 in F2-01 only on inverter 1 (with the BMS cable), AGn (AGM) on the others
E3	different firmware versions	on the main screen hold DOWN and compare the firmware versions on all three; if different, contact the seller
0E	warning: CAN link lost between inverters	check the parallel cables, restart
1E	warning: different output mode	switch off the inverter (Power on/off OFF), check F1-02 (3P1 / 3P2 / 3P3) and switch on again
2E	warning: different battery voltage on the inverters	all inverters on the shared batteries; battery cables of equal length and material

minertech.org · MinerTech® trademark · © 2017–2026, all rights reserved
+38 093 293 93 93 · +38 099 054 40 38 · Specialist Pavlo Leonidovych · strooks@gmail.com

KIT CONNECTION GUIDE

Two MFUZOP 16 kWh batteries: connection and BMS

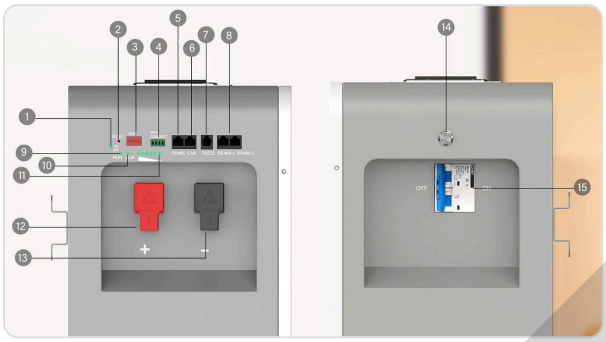

MFUZOP battery panel

Manufacturer's diagram: 1 ON/OFF indicator, 2 RESET, 3 ADS address switches, 4 MAIN CONTACT dry contact, 5 RS485, 6 CAN, 7 RS232, 8 RS485-1 / RS485-2, 9 / 10 RUN / ALM LEDs, 11 charge level, 12 «+» terminal, 13 «–» terminal, 14 power button, 15 breaker.

Batt. 1: DIP 1 = ON = addr. 1*

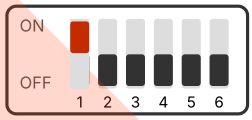

Batt. 2: DIP 2 = ON = addr. 2 *

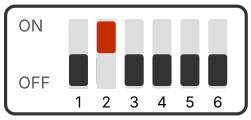

	2 × MFUZOP 51.2 V 314 Ah
Capacity, current	**32.14 kWh*** (2 × 16.07), 628 Ah*; max. **210 A** charge and discharge each per the rating plate, up to 420 A* together (≈ 21.5 kW from the batteries*)
Link to the inverter	step 4; inverter 1: **Li2.** Pylon protocol on each battery's display (battery manual, 5.6).
ADS (3)	Battery 1: DIP 1 = ON (address 1); battery 2: DIP 2 = ON, rest OFF (address 2); battery manual, 4.5
From the product description	LiFePO4 16S; charge (recommended) 56.8–57.6 V, 60–100 A; standard discharge current 157 A, BMS 200 A; overcharge protection 58.4 V, deep discharge 43.2 V (not from manufacturer sources)

Connecting the battery to the system

1. Both batteries off (breaker (15) OFF). With them off, before switching on*, set ADS (3): **battery 1:** address 1, **battery 2:** address 2 (diagram above, seller's data *).
2. **Before joining the batteries** (p. 3, step 3): switch each on alone (breaker (15), button (14)), measure terminals 12 and 13 with a tester, switch off (15). Max. difference 0.5 V*; if more, only one on the busbars for now (step 5)*.
3. From the common busbars (p. 2): «+» → «+» **(12),** «–» → «–» **(13)** of each battery, identical cables*. Section from the busbars in total: ×3 the inverter cable (p. 38), to each: ≥ ×1.5*.
4. Communication (seller's data *): **RS485 (5)** of battery 1 (left, next to CAN (6)) → port **8 of inverter 1:** RJ45 from the inverter box (p. 30). Battery 1 ↔ battery 2: RJ45 cable between **RS485-1 / RS485-2 (8)** on the right, either of the two ports; RS485 (5) of battery 2 stays free. The inverter sees both batteries via battery 1*. No pinouts in the sources.
5. Switching on (p. 4, step 2): inverter Power on/off OFF, on the battery the breaker (15), button (14). **If the voltages differ** (seller's data *): only battery 1 on the busbars (address 1, RS485 (5) → inverter 1), disconnect the cable between ports 8 (ports 8 free); grid on, PV off (charge 3 × 30 A = 90 A*), charge fully (indicator (11)). Switch everything off (loads, AC, Power on/off, 250 A breakers and (15)); battery 1 off the busbars, battery 2 on the busbars, with it off address 1, inverter 1 RJ45 into RS485 (5) of battery 2; charge the same way. Switch everything off: battery 2 address 2, inverter 1 RJ45 back into RS485 (5) of battery 1 (RS485 (5) of battery 2 free), cable between ports 8 back in place; check the voltages (step 2), connect both, then PV*.
6. Check F2-01 (inverter 1 **Li2,** 2 and 3 AGn), F2-09, F2-10, on 2 and 3 F2-05, F2-07 (p. 4). The link works if **"Li"** flashes on inverter 1 and battery data are shown (inverter manual, p. 24): max. charge voltage and current from the BMS (item 13), SOC (item 15); otherwise **4B** (p. 27): check the RJ45 cables, ADS and F2-01, then contact the seller *. The BMS may set the charge current of inverter 1 (p. 30): if item 13 shows over 60 A, lower F2-09 on inverters 2 and 3: item 13 + 2 × F2-09 ≤ 200 A*.

Important about power. Per the rating plate the two batteries give up to **420 A*** (≈ 20 kW at the output*), and the standard discharge current from the product description is 157 A per battery: continuous ≈ 15 kW* (2 × 157 A × 51.2 V × efficiency 94 %); the three inverters give 33 kW. Without the grid keep the load above solar to ≈ 15 kW*; the full 33 kW with the grid (F1-01 = SUB, default)*. You can protect the batteries from overcurrent with program **F2-25** (manual, p. 20): ≈ 105 A on each* (3 × 105 ≈ 2 × 157 A*); if the discharge current is higher, the inverter stops discharging and goes to bypass (with the grid) or standby (without the grid that phase's output goes off*), so without the grid keep the load per phase above solar to ≈ 5 kW*. If the battery discharge protection trips, all three phases go off*: on inverters 2 and 3 cut-off F2-07 = 46.2 V* (p. 4); under heavy load do not discharge the batteries below ≈ 20 % SOC*. More capacity: batteries in parallel* (up to 15).

minertech.org · MinerTech® trademark · © 2017–2026, all rights reserved
+38 093 293 93 93 · +38 099 054 40 38 · Specialist Pavlo Leonidovych · strooks@gmail.com