CONNECTING THE BATTERY TO THE INVERTER

DATOU BOSS 25.6V 314Ah 8.03kWh

Wall-mounted: power cables, communication cable from the kit, protocol and settings for each of our 24 V inverters



Wiring diagram

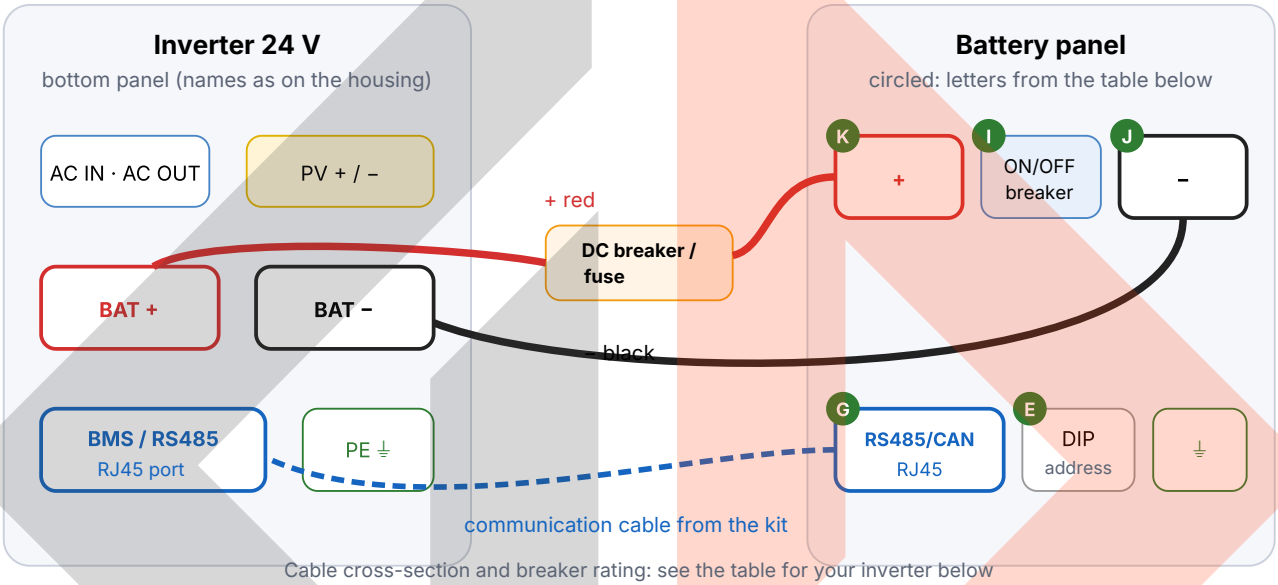

Battery

Model	**SPB12D24314A01EU, wall-mounted, LiFePO4**
Rated voltage	**25.6 V (cut-off 21.6 / 29.2 V)**
Capacity / energy	**314 Ah / 8.03 kWh**
Charge / discharge current	**continuous 150 A / 150 A**
Communication	**RS485, CAN, Bluetooth (JBD BMS app)**
Weight, size	**≤ 61 kg, 355 × 260 × 565 mm**

What you will need

- Two battery–inverter power cables (cross-section in the table below), lugs for the terminals
- DC breaker or fuse on the positive cable (rating in the table)
- Communication cable from the battery kit
- Earth wire, multimeter, spanners for the terminals
- Phone with the JBD BMS app (optional, to view the status)

minertech.org · MinerTech® trademark · © 2017–2026, all rights reserved
+38 093 293 93 93 · +38 099 054 40 38 · Specialist Pavlo Leonidovych · strooks@gmail.com

Connector panel: what we use

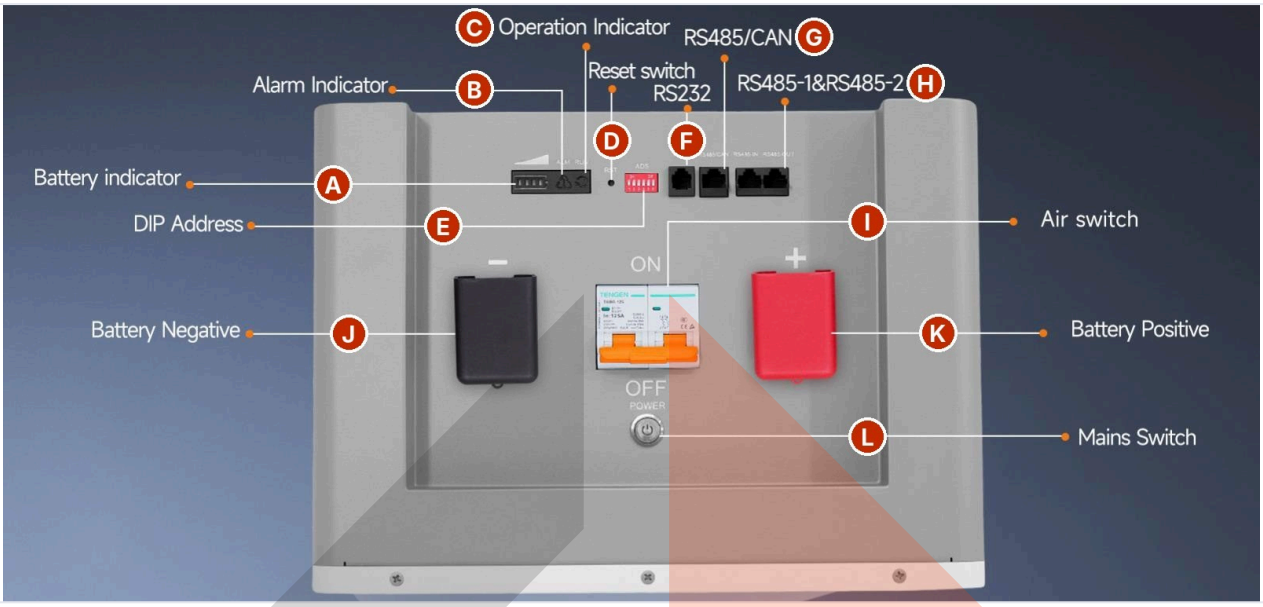

№	Label	What to connect
K	**+** positive terminal (red)	power «+» to the inverter BAT+ via the DC breaker / fuse
J	**–** negative terminal (black)	power «–» to the inverter BAT–
G	**RS485/CAN** communication with the inverter	communication cable from the kit to the inverter's BMS / RS485 port
E	**DIP Address** address switches	one battery: do not change the factory setting
I	**ON / OFF** 125 A breaker	switches the power output to the terminals
L	**POWER** power button	switches on the BMS
H	**RS485-1 / 2** communication between batteries	only with several batteries
F	**RS232** computer port	not needed for the inverter

DATOU BOSS manufacturer's diagram with labels A–L. What each letter means is in the table.

Connection procedure

1. The inverter is off, the grid and panels are disconnected from it. The battery breaker (I) is in the **OFF** position, the DC breaker on the cable is off.
2. Address: **DIP switches** (E): do not change the factory setting for a single battery.
3. Connect the housing earth to the PE of the distribution board.
4. Negative cable: battery terminal – (J) → inverter **BAT–**.

minertech.org · MinerTech® trademark · © 2017–2026, all rights reserved
+38 093 293 93 93 · +38 099 054 40 38 · Specialist Pavlo Leonidovych · strooks@gmail.com

5. Positive cable via the DC breaker / fuse: terminal + (K) → inverter **BAT+**. Check the polarity with a multimeter before switching on.
6. Communication cable: battery port **RS485/CAN** (G) → inverter port **BMS / RS485**, with the cable from the kit.
7. Check the protocol in the BMS (section below) and select the same one in the inverter (table below).
8. Switch on the battery breaker (I), then the POWER button (L), then the DC breaker, then the inverter. After 10–30 s the inverter should show the battery charge in %.
9. Connect the grid, loads and solar panels according to the inverter manual.

Communication protocol

1. The factory protocol of this battery is **Pylon** (as in the DATOU BOSS 3.3 kW inverter manual: «DATOU BOSS 25.6 V: PYL»). There is no need to change it.
2. The **RS485/CAN** (G) port carries both interfaces: RS485 on pins 1, 2, 7, 8, CAN on 4, 5. Use the communication cable from the kit.
3. The battery status (charge, cell voltages) can be seen in the **JBD BMS** app via Bluetooth (App Store or Google Play).
4. In the inverter select Pylon per the table below. After 10–30 s the inverter should show the battery charge in %.

minertech.org · MinerTech® trademark · © 2017–2026, all rights reserved
+38 093 293 93 93 · +38 099 054 40 38 · Specialist Pavlo Leonidovych · strooks@gmail.com

Settings for each of our 24 V inverters

Inverter	DC breaker · cable	Protocol in the BMS → what to set in the inverter (numbers from this inverter's menu)	Charging current
JSDsolar J4000E 4kW 24V	200 A 35 mm²	BMS: **Pylon** → **17 = FEL**, **38 = PYL**	07: total, 06: from the grid
ECGSOLAX HVM 3.6kW 24V	200 A 35 mm²	BMS: **Pylon** → **17 = FEL**, **38 = PYL**	07: total, 06: from the grid
POWGROW 3.6kW 24V	200 A 35 mm²	BMS: **Pylon** → **17 = FEL**, **38 = PYL**	07: total, 06: from the grid
POWGROW SMS-5kW 24V	250 A 50 mm²	BMS: **Pylon** → **17 = FEL**, **44 = PYL**	07: total, 06: from the grid
POWLAND ISolar-SMS-5KW-24V-WiFi	250 A 50 mm²	BMS: **Pylon** → **17 = FEL**, **44 = PYL**	07: total, 06: from the grid
EASUN SMT-4KW 24V	200 A 35 mm²	BMS: **Pylon** → **05 = PYL**, **37 = ON**	02: total
ANENJI ANJ-4000W-24V-WiFi 4.2kW 24V	200 A 35 mm²	BMS: **Pylon** → **05 = LI2**	02: total, 11: from the grid
Aninerel ANL-4200T-24L-W-PRO 4.2kW 24V	200 A 35 mm²	BMS: **Pylon** → **05 = LI2**	02: total, 11: from the grid
DATOU BOSS 3.3kW 24V	200 A 35 mm²	BMS: **Pylon** → **A17 = PYL**	A13: total, A12: from the grid

This battery's protocol is Pylon; select Pylon in every inverter. The protocol in the BMS and in the inverter must match. Other settings (source priority, output 230 V / 50 Hz) per your inverter manual.

Charge current. The continuous charge current of this battery is 150 A. In the inverter: total charge up to 100 A, grid charge 40–100 A; with BMS communication the inverter also limits charging according to the BMS data.

No BMS communication (only voltage instead of percent): check that the cable is in the RS485/CAN port (G), not RS232 or RS485-1/2, and that the protocol in the BMS matches the inverter. After changing the protocol, restart the battery and the inverter.

Several batteries in parallel

- Up to 15 batteries in parallel. Each one's address is set with the **DIP Address** switches (E); the available sources have no address table, so see the paper manual in the kit.

- The batteries are linked to each other with RJ45 cables via the **RS485-1 / RS485-2** (H) ports.
- The communication cable to the inverter comes from one battery only, port **RS485/CAN** (G).
- The power cables from each battery to the common busbar are of equal length and cross-section.

minertech.org · MinerTech® trademark · © 2017–2026, all rights reserved
+38 093 293 93 93 · +38 099 054 40 38 · Specialist Pavlo Leonidovych · strooks@gmail.com