USER MANUAL · ENGLISH

DATOU BOSS 3.3kW 24V

Hybrid solar inverter DT-2433M

3300 W rated power	**24 V DC** battery voltage
40–450 V MPPT range, up to 5000 W of panels	**120 A** max. battery charge current



This manual was prepared by the seller from the DT-2433M manufacturer's manual; the full manufacturer's manual is the "Original manufacturer's manual" on the product page. Texts, diagram and tables are our own. Before installation check the label on the case: if values on the device differ from those given, the device is right.

1 What this device is

Hybrid inverter 3.3 kW for a system with a 24 V battery: pure sine wave inverter, MPPT solar charge controller and grid charger in one case. Feeds the loads from solar, battery or grid, charges the battery from solar (up to 120 A) and from grid (up to 80 A). Works off-grid (factory mode), hybrid (solar and grid together, no export) or with surplus export to the grid (mode A15 = GRE only). Can also run without a battery.

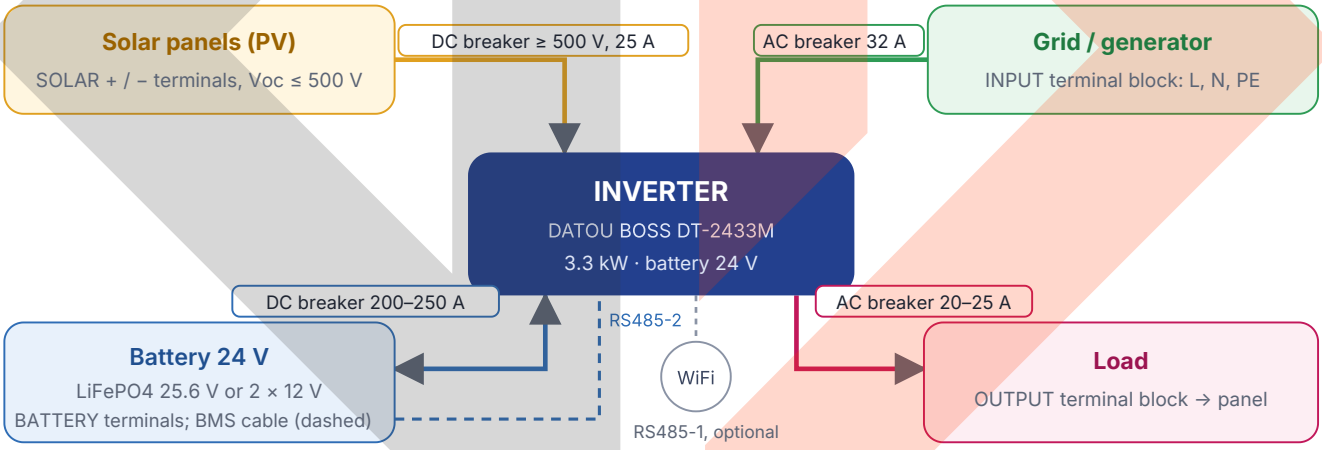

System diagram. Lines show the recommended protective breakers (section 7). Earthing the inverter case is mandatory.

2 Supplied

- Inverter DT-2433M
- Manufacturer's manual with certificate and warranty card
- Wall brackets and M4×6 screws
- Wi-Fi module: optional, not in the basic kit
- M6 wall plugs: bought separately

After unpacking inspect the inverter. If it is damaged or something is missing, do not switch it on and inform the carrier and the seller. Keep the box: you will need it for transport.

minertech.org · MinerTech® trademark · © 2017–2026, all rights reserved
+38 093 293 93 93 · +38 099 054 40 38 · Specialist Pavlo Leonidovych · strooks@gmail.com

3 Specifications

Model	**DT-2433M**
Rated power	**3300 W,** pure sine
Max. panel power	5000 W
MPPT range	40–450 V DC
Rated PV voltage	240 V DC
Max. PV voltage (Voc at lowest temperature)	**500 V DC**
Max. PV current / number of MPPT	18 A / 1
Battery voltage	**24 V DC**
Battery types	lead-acid, lithium; set from the panel
Battery operating voltage range	parameters A1–A7 (factory: charge 28.4 V, alarm 22 V, off 21 V)
Max. charge current	from solar 120 A, from grid 80 A, total 120 A
Efficiency	battery 94 % (peak), MPPT ≥ 99.9 %
Transfer time	10 ms (typ.)
Parallel operation	not supported
Dimensions, weight	325 × 275 × 102 mm, 5.5 kg (box 400 × 330 × 167 mm, 6.5 kg)

Grid input, off-grid mode	220/230/240 V; 165–280 V (UPS) or 120–280 V (APL); 45–55 / 55–65 Hz
Grid input, hybrid and grid export	187–264 V; 47–52 / 57–62 Hz
Output	220/230/240 V ±2 %, 50/60 Hz ±1 %
Output current	15 / 14.3 / 13.8 A (220/230/240 V)
Grid export	up to 3300 W, power factor > 0.98
Protection	anti-islanding ≤ 2 s; overload and short circuit: automatic (battery), fuse / breaker (grid); overheating > 90 °C: output off
Display and comms	LCD + 4 LEDs; 2 RS485 ports, Wi-Fi module optional
Cooling, noise	smart-controlled fan, ≤ 55 dB
Protection rating, mounting	IP20, wall-mounted
Operating conditions	–10...+50 °C, humidity 0–95 % non-condensing, up to 2000 m (derated above)
Storage	–15...+60 °C

4 Layout: connectors, indicators, buttons

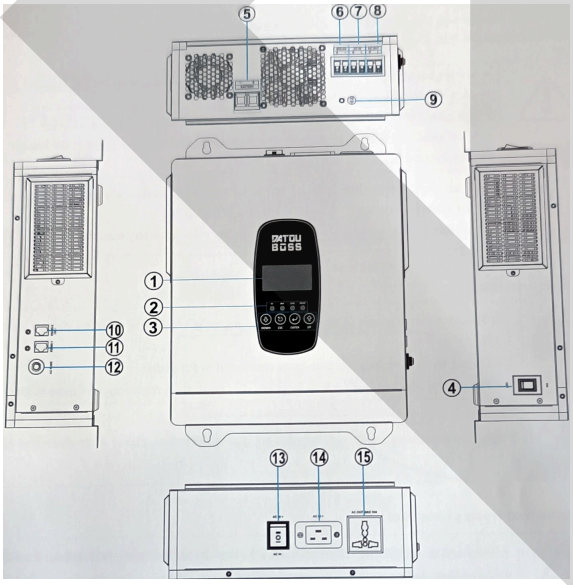

№	Device
1	LCD display: mode, voltages, currents, power, codes
2	LEDs AC, INV, CHG, FAULT
3	Buttons DOWN, ESC, ENTER, UP
4	Power switch (on the side wall)
5	Battery terminals BATTERY (bottom)
6	Panel terminals SOLAR (bottom)
7	INPUT terminal block (bottom): grid / generator, L, N, PE
8	OUTPUT terminal block (bottom): uninterruptible output to the panel
9	Case earth bolt
10	RS485-2 (RJ45, on the side wall): lithium battery BMS link
11	RS485-1 (RJ45): Wi-Fi module, external comms
12	AC input fuse
13	Grid input selector (top): INPUT terminal block or input socket
14	AC input socket: grid via a cable with plug
15	Output socket: loads with plug

5 Safety: read before installation

- Installation and connection by a qualified electrician only, following local rules.
- Before working on the terminals switch off the battery, solar panels and grid; wait at least 5 minutes: the capacitors still hold voltage.
- In the sun the panels are always live: cover them with lightproof material or switch off the PV DC breaker.
- Do not mix up battery and panel plus and minus: this will damage the inverter.
- Do not connect or disconnect wires while the inverter is running, do not open the terminal cover.
- Earth the case before first switch-on. Do not short the AC output and DC input.
- Do not disassemble the inverter: repairs at a service centre only, otherwise the warranty is void.

minertech.org · MinerTech® trademark · © 2017–2026, all rights reserved
+38 093 293 93 93 · +38 099 054 40 38 · Specialist Pavlo Leonidovych · strooks@gmail.com

- **Never charge a frozen battery.**
- Built-in protection only absorbs weak surges: where thunderstorms are frequent, fit surge protection before the grid input and PV input.
- Some parts get very hot in operation: wear protective gloves.
- Motors, pumps, compressors, laser printers: starting power is 2–3 times rated; size by peak power.
- Class A inverter: may cause slight radio interference in the home.

6 Location and mounting

1. Dry ventilated room without water, flammable gases or corrosive substances; temperature 0–40 °C, humidity below 90 %.
2. Vertically on a concrete or other non-combustible wall that can bear the inverter's weight.
3. 100 mm free on each side; do not cover the ventilation grilles. No direct sun, dust, moisture or heat sources.
4. Screw the brackets to the case with M4×6 screws (supplied), then fix the inverter to the wall with **four screws** and M6 wall plugs (bought separately): two holes at the top and two at the bottom, 190 mm apart. Dimensions with brackets 275 × 375 mm, depth 108 mm.
5. If the inverter was brought in from the cold, wait until condensation dries. After long storage make sure it is dry and free of corrosion.

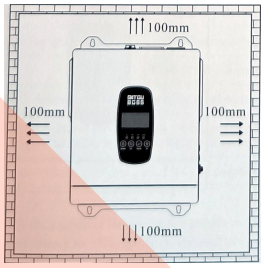

100 mm on all sides

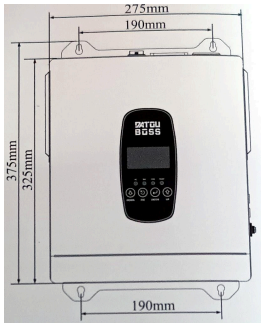

mounting holes

7 Connection

Connection order (as in the manufacturer's manual): **1 battery → 2 loads (AC output) → 3 solar panels (PV) → 4 grid (AC input).** All breakers off during the work. Connect the case earth before first switch-on. First remove the bottom cover (2 screws).

1. Battery

- Between battery and inverter: a DC breaker rated above the battery voltage (200–250 A).
- Strip the wires 6 mm. Battery plus to "+" of the BATTERY terminal, minus to "–". Check polarity and that there is no short.
- Cross-section: no more than 5 A per 1 mm² (35 mm²), wires as short as possible.

2. Loads (OUTPUT)

- First switch off all loads. Strip the wires 10 mm.
- L, N, PE to the OUTPUT terminal block per the marking. Total load power below 3300 W.
- **Do not mix up the INPUT and OUTPUT terminal blocks.**

3. Solar panels (PV)

- Panel wires go first to the PV DC breaker (breaker voltage above string voltage), then to the SOLAR terminals: plus to plus, minus to minus. Strip 10 mm.
- String open-circuit voltage allowing for frost up to 500 V, current up to 18 A.

4. Grid (INPUT)

- Between grid and inverter: a separate AC breaker; the grid is off during connection.
- Strip the wires 10 mm. **Connect PE first,** then L and N per the marking; do not mix up phase and neutral.
- The grid can also be supplied by a cable with plug into the input socket (14), selected with the switch (13).

Generator: start it and wait for stable running → feed the input → switch on the inverter → once the inverter is normal, connect the loads. Generator power at least three times the inverter power; A14 = APL. **Comms:** RS485-2: cable from the lithium battery BMS (protocol in A17), RS485-1: Wi-Fi module. After connecting, refit the bottom cover.

minertech.org · MinerTech® trademark · © 2017–2026, all rights reserved
+38 093 293 93 93 · +38 099 054 40 38 · Specialist Pavlo Leonidovych · strooks@gmail.com

Cables and breakers

Section	Cable (recommended)	Breaker / fuse	Note
Battery 24 V (to ≈ 160 A)	35 mm² Cu (≤ 5 A/mm²)	DC 200–250 A	as short as possible
PV (to 18 A, Voc ≤ 500 V)	4–6 mm² PV1-F	DC ≥ 500 V, 25 A	polarity!
AC input (grid)	4–6 mm² Cu	AC 32 A	PE first
AC output (to 15 A)	2.5–4 mm² Cu	AC 20–25 A	do not confuse with input
Earth	≥ 4–6 mm² Cu	—	before first switch-on

Each breaker rating ≈ 1.5 × the maximum operating current of the section; rated voltage above the battery, PV string or grid voltage.

8 First start and shutdown

Switching on

1. Check connections, polarity, earthing and panel string voltage.
2. Switch on the battery (lithium: its button or breaker) and the battery DC breaker.
3. Press the inverter switch: after a while voltage appears at the output.
4. While the inverter runs on battery, set A17 (battery type), voltages or SOC, A0, A10, A15, 230 V / 50 Hz (section 11): some parameters can be changed only in battery mode.
5. Switch on the PV breaker, then the grid breaker.
6. Connect the loads gradually.

Switching off

1. Switch off the loads.
2. Press the inverter switch: the output turns off.
3. On battery the inverter shuts down fully after a while. On grid it stays in standby, and on PV it keeps charging the battery until you switch off the grid and PV breakers.
4. Switch off the battery DC breaker.

9 Buttons and LEDs

Button	What it does
DOWN	Previous page / decrease value
ESC	Exit without saving
ENTER	Hold 2 s: enter settings; short: confirm; hold over 2 s: save and exit
UP	Next page / increase value
ENTER on the main screen	Mute the alarm (an icon appears)

Indicator	Meaning
AC (green)	Lit: powered from grid; flashing: grid normal, but the inverter is in battery priority mode
INV (green)	Lit: inverter running (from battery / solar)
CHG (yellow)	Lit: constant-voltage charge, float or battery full; flashing: constant-current charge
FAULT (red)	Flashing: **alarm** (warning); steady: **protection tripped;** off: normal

10 Display pages and changing settings

Scroll with UP / DOWN; the page number is in the middle of the screen. **Page 00:** output priority (GRD / PV / PBG) and state: INV inverter, REC grid charging, GRD grid + solar, GRE export to grid, UTI grid supply via bypass. In case of a fault a code appears in place of the number.

Page	On screen	Page	On screen
01	Output voltage and frequency	10	Power and energy drawn from the grid
02	Grid input voltage and frequency	11	Grid charging power and energy
03	Battery voltage and current	12	Load power and loading, %
04	Battery discharge power and energy supplied, kWh	13	Load energy and current
05	Battery charge power and energy stored, kWh	14	PV1 panel voltage and current
06	Battery charge in % and remaining capacity, Ah (capacity only with a BMS link via GRO, VLO or PAC protocol)	15	PV1 power and yield
07	Internal BUS voltage and current	16	PC comms (address)
08	Grid input current and converter current	17	MPPT and inverter heatsink temperature
09	Power and energy exported to the grid	18	DC/DC heatsink temperature and firmware version

minertech.org · MinerTech® trademark · © 2017–2026, all rights reserved
+38 093 293 93 93 · +38 099 054 40 38 · Specialist Pavlo Leonidovych · strooks@gmail.com

How to change settings

1. Hold ENTER 2 seconds: settings open, the parameter name (A0, A1…) flashes. Choose the parameter with UP / DOWN.
2. Press ENTER briefly: the name stays lit and the value on the right flashes. Choose the value with UP / DOWN and press ENTER briefly: the value stops flashing.
3. To exit, hold ENTER over 2 seconds (saving) or press ESC (without saving).

11 Settings A0–A30 and recommendations for LiFePO4 25.6 V

Limits and factory values per the manufacturer's manual. **Battery:** changed only in battery mode (switch off the grid breaker meanwhile); **inv.:** only in inverter mode. "LiFePO4": for a 25.6 V battery (8S), e.g. DATOU BOSS 25.6 V 314 Ah.

№	Parameter	Options / range	Factory	LiFePO4 25.6 V	Note
A0	Output priority **BAT**	Grd: grid; PV: solar; PbG : battery	**PbG**	PbG; Grd **if battery is only backup**	PV not advised only with A15 = dIS (off-grid)
A1	Charge voltage (equalising)	24.0–31.0 V	28.4 V	**28.4 V**	With BMS link works with A23: whichever comes first
A2	Float voltage	24.0–31.0 V	27.6 V	**27.2 V**	With BMS link works with A23
A3	Low-voltage shutdown	14.0–26.0 V	21.0 V	**23.5 V**	Only with A17 = Pb; not below BMS protection
A4	Low-voltage alarm	15.0–27.0 V	22.0 V	**24.0 V**	Only with A17 = Pb
A5	Return after shutdown	15.0–30.0 V	26.0 V	**26.0 V**	Only with A17 = Pb
A6	Grid → battery transfer (in PbG)	18.0–31.0 V	26.4 V	**26.4 V**	Only with A17 = Pb
A7	Battery → grid transfer (in PbG)	14.0–29.0 V	22.0 V	**24.5 V**	Only with A17 = Pb
A8	Output frequency	50 / 60 Hz	50 Hz	**50 Hz**	
A9	Output voltage	220 / 230 / 240 V	230 V	**230 V**	
A10	Charge priority **BAT**	SNU — solar + grid (solar first); OSO — solar only; CSO — grid only when there is no sun	**SNU**	SNU; OSO — no **grid charging**	
A11	With / without battery Battery	bC — battery connected; bNC — no Battery 5–80 A	**bC**	**bC**	Do not set A0 = PbG, A15 = dIS with bNC
A12	Grid charging current		30 A	**30–50 A**	No more than the battery allows
A13	Max. charge current (total)	5–120 A	60 A	**100 A (314 Ah); ≈ 50 A (100 Ah)**	No more than the BMS allows
A14	Grid voltage range	UPS — 165–280 V; APL — 120–280 V	**UPS**	**UPS**	APL — for a generator or a weak grid
A15	Operating mode **BAT**	dIS — off-grid; GRd — hybrid (no export); GRE — with grid export	**dIS**	dIS **or** GRd	GRE — only if grid export is allowed; section 13
A16	Grid export current	0 — max. (3300 W ÷ 230 V ≈ 14 A)	0 A	**0 A**	For GRE: power ÷ voltage, 1 kW / 220 V → 4 A
A17	Battery type / BMS protocol	Pb — lead-acid or no link; GRO — Growatt; VLO — Voltronic; PYL — Pylon (two variants); PAC — PACE	**Pb**	PYL **with BMS cable; no cable —** Pb	Protocol as on the battery (DATOU BOSS 25.6 V — PYL)
A18	BMS address	000–247	001	**001**	
A19	Shutdown at SOC	1–80 %	5 %	**10 %**	Only with BMS link
A20	Return after shutdown (SOC)	1–90 %	15 %	**20 %**	Only with BMS link
A21	Battery → grid at SOC (in PbG)	1–80 %	10 %	**15 %**	Only with BMS link
A22	Grid → battery at SOC (in PbG)	1–100 %	80 %	**80 %**	Only with BMS link
A23	Stop charging at SOC	1–100 %	100 %	**100 %**	Only with BMS link; from the grid

minertech.org · MinerTech® trademark · © 2017–2026, all rights reserved
+38 093 293 93 93 · +38 099 054 40 38 · Specialist Pavlo Leonidovych · strooks@gmail.com

№	Parameter	Options / range	Factory	LiFePO4 25.6 V	Note
A24	Restart after low voltage BAT	bRE — yes; bRd — no	bRE	bRE	
A25	Restart after overload BAT	LRE — yes; LRd — no	LRd	LRd	
A26	Restart after overheat INV	tRE — yes; tRd — no	tRd	tRd	
A27	PC comm address	000–247	001	001	
A28	Output neutral ground BAT	OFF / ON	OFF	OFF	Not used in this model
A29	Energy counter reset BAT	ESC — no; CLr — reset	ESC	ESC	
A30	Factory settings	ESC — no; rES — reset all	ESC	ESC	The manufacturer may update factory values

12 LiFePO4: settings and value order (otherwise error 42)

- **With a BMS cable (better):** cable into RS485-2, A17 = battery protocol (for DATOU BOSS 25.6 V — PYL), A18 = address (001). The inverter works by A1–A2 and SOC A19–A23; voltages A3–A7 are inactive but must keep the order.
- **No BMS link:** A17 = Pb and voltages A1–A7 from the "LiFePO4" column. A3 not below your battery's BMS protection threshold.
- Current A13 no more than the BMS allows (314 Ah — 100 A, 100 Ah — about 50 A); A12 not above A13.
- Remaining capacity (Ah) on page 06 is shown only with GRO, VLO or PAC protocols; with PYL it is absent, which is normal.

Whatever A17 is, both chains must hold, otherwise the setting is not saved and code 42 appears:

	Voltages: A1 > A2 > A6 > A5 > A7 ≥ A4 > A3, V
factory	**28.4 > 27.6 > 26.4 > 26.0 > 22.0 ≥ 22.0 > 21.0**
LiFePO4	**28.4 > 27.2 > 26.4 > 26.0 > 24.5 ≥ 24.0 > 23.5**

	SOC: A23 > A22 > A20 > A21 > A19, %
factory	100 > 80 > 15 > 10 > 5
LiFePO4	100 > 80 > 20 > 15 > 10

Enter new values in chain order from left to right: then the order is never broken at any step.

13 Operating modes

A15 — mode: dIS — off-grid (factory), no export; GRd — hybrid: solar and grid power the load together, **no export to the grid;** GRE — with grid export (Grid-Tie): **only in this mode** surplus solar goes to the grid, current limited by A16. **A0 — output priority, A10 — charge priority** (SNU / OSO / CSO).

A0 \ A15	dIS — off-grid	GRd — hybrid	GRE — with grid export
Grd — grid priority	Load from the grid (bypass), solar only charges the battery.	Solar charges the battery first, then powers the load together with the grid. No export.	As hybrid, but surplus solar is exported to the grid.
PV — solar priority	**Not recommended.** Load — from the grid, solar charges the battery; grid charging stops when the BUS voltage exceeds the rectified grid voltage.	Solar → load, surplus → battery; the grid covers any shortfall. No export.	Solar → load → battery → grid; export is possible even before the battery is full (threshold depends on grid voltage).
PbG — battery priority (factory)	Load is powered by solar and battery. On discharge to A7 (Pb) or A21 (BMS): switch to grid and charge per A10; after charging to A6 / A22: back to battery. Same for all A15.		

- **No grid:** in all modes the load is powered by solar and battery. After discharging to the protection limit the inverter goes to standby, solar charges the battery and output resumes (A5 / A20); or press the switch twice 1–2 s apart.
- After grid surges the inverter checks it for about a minute before connecting, so it does not switch constantly on an unstable grid.
- **No battery (A11 = bNC):** runs on solar and grid. Do not set A0 = PbG (the inverter is forced to work as hybrid / with export) or A15 = dIS (output becomes unstable). If solar is short and there is no grid, the output turns off and restarts after 10+ seconds once PV voltage is normal.

minertech.org · MinerTech® trademark · © 2017–2026, all rights reserved
+38 093 293 93 93 · +38 099 054 40 38 · Specialist Pavlo Leonidovych · strooks@gmail.com

14 Runtime on battery

Batt. 25.6 V	100 Ah 2.56 kWh	314 Ah 8.03 kWh
300 W	6.9 h	22 h
500 W	4.1 h	13 h
1000 W	2.1 h	6.5 h
2000 W	1.0 h	3.3 h
3000 W	0.7 h	2.2 h

No sun, constant load: 90 % of LiFePO4 capacity × 90 % efficiency. For 2–3 kW the battery must allow 100–150 A discharge current.

15 Wi-Fi and app

1. Wi-Fi module (optional) into port RS485-1.
2. Install the “Solar of Things” app from the App Store or Google Play.
3. Register and link the device by the serial number or QR code on the box or module sticker.
4. Detailed steps are in the Wi-Fi module manual.

16 RS485 ports (RJ45)

Pin	RS485-1	RS485-2 (BMS)
1	RS485-B	RS485-B
2	RS485-A	RS485-A
3	—	—
4	+5 V	—
5–7	—	—
8	GND	—

“—”: not connected.

17 Fault codes 40–68

Alarm: the red FAULT **blinks,** the inverter warns of a problem (codes 48, 51, 54). **Protection:** FAULT **stays lit:** the inverter self-protection has tripped. The code is shown on the display. Note it, fix the cause and restart the inverter if needed.

Code	Meaning	What to do
40	EEPROM memory error	Contact the seller.
41	Main controller communication failure	Contact the seller.
42	Wrong settings	Check the value order (section 12) or reset to factory (A30 = rES).
43	Wrong reference voltage	Internal power supply unstable: restart the inverter.
44	BUS soft start error	Check whether the battery or other input voltage is too low.
45	Hardware overcurrent	Check for overload or a large non-linear load.
46	Output short circuit	Find and clear the short circuit, disconnect the faulty load.
47	Inverter fault	Motor or compressor inrush: switch the inverter off and on; if that fails, contact the seller.
48	Battery high voltage — alarm	Check the battery voltage, number and condition of cells.
49	Battery high voltage — protection	Check the battery voltage, number and condition of cells.
50	Battery low voltage — protection	Charge the battery; check the number and condition of cells.
51	Battery low voltage — alarm	Charge the battery; check the number and condition of cells.
52	BUS high voltage	Check whether the battery or input voltage is too high.
53	BUS low voltage	Check whether the battery or input voltage is too low.
54	Overload — alarm	Reduce the load.
55	Inverter heatsink overheat	Check the fan, temperature, vents and dust filter.
56	DC/DC heatsink overheat	Same: fan, temperature, ventilation, filter.
57	MPPT heatsink overheat	Same: fan, temperature, ventilation, filter.
58	PV1 high voltage	Panel string voltage outside the operating range: Voc no more than 500 V.
59	PV2 high voltage	Check whether PV2 voltage is outside the operating range.
60	Grid high voltage	Check the grid input voltage.
61	Wrong frequency	Check the grid or generator frequency.
62	Remote shutdown	Check whether a shutdown command was sent via monitoring.
63	No link with lithium battery	Protocol A17 as on the battery, cable in port RS485-2, address A18.
64	Cell / lithium battery high voltage	Check cell and battery voltages and charge settings.
65	Cell / lithium battery low voltage	Charge the battery, check the cells.
66	Lithium battery discharge overcurrent	Reduce the load.
67	Lithium battery charge overcurrent	Reduce the maximum charge current (A12, A13).
68	Lithium battery wrong temperature	Is the battery overheated? Switch off, wait for recovery and start again.

minertech.org · MinerTech® trademark · © 2017–2026, all rights reserved
+38 093 293 93 93 · +38 099 054 40 38 · Specialist Pavlo Leonidovych · strooks@gmail.com

18 Troubleshooting

What happens	Possible cause	How to fix
Will not turn on	Battery flat, breaker off, reversed polarity	Check the battery voltage (above threshold A3), breaker, polarity; switch a lithium battery on with its button.
Setting not saved, code 42	Voltage or SOC order broken	Correct per section 12 or reset to factory (A30 = rES).
A0, A10, A11, A15, A24, A25 do not change	These parameters change only in battery mode	Switch off the grid breaker while setting.
Grid on, yet running on battery	A0 = PbG (factory): grid only after discharge to A7 / A21	If grid power is needed: A0 = Grd.
No charging from panels	String voltage outside 40–450 V, PV breaker off, polarity; A10	Check voltage and polarity, PV breaker, display page 14.
No link with lithium battery (63)	Cable in the wrong port, wrong protocol or address	Cable in RS485-2, protocol A17 as on the battery, address A18.
No capacity, Ah, on page 06	No BMS link or PYL protocol	Capacity is shown only with GRO, VLO, PAC, which is normal.
No grid export	A15 not GRE or A16 = 0 A	If export is allowed: A15 = GRE and current A16.
Does not accept a generator or weak grid	Voltage or frequency outside UPS range	A14 = APL; wait about a minute for the grid check.

19 Maintenance

- The inverter needs almost no maintenance. If the system is idle for a long time, charge the battery at least once every 3 months.
- Lead-acid batteries: every 3 months (in hot weather every 2 months) discharge until the inverter shuts off and charge for at least 12 hours. They last 3–5 years; replace the whole set at once.
- Before replacing the battery, switch off the inverter, then disconnect the AC and PV inputs. Remove metal jewellery, use insulated tools, avoid short circuits and reversed polarity.
- Do not throw the battery into fire or open it: dangerous.
- Dust filter: undo the 2 screws of the side filter covers on the left and right, remove the cover and mesh, clean and refit. In dusty rooms do this regularly: a clogged filter causes overheating (codes 55–57).

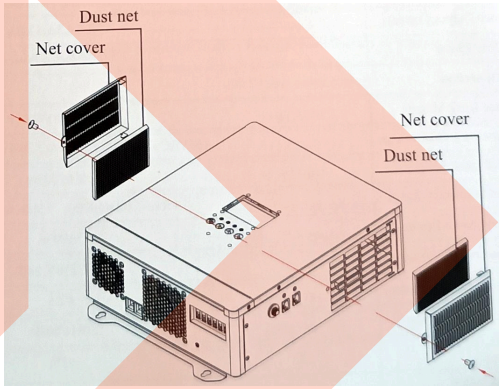

Dust filter (mesh) and its cover on both sides

About this guide: prepared from the manufacturer's English manual specifically for DT-2433M; table A0–A30 and codes 40–68 are complete. LiFePO4 recommendations are approximate: check them against your battery's manual.

minertech.org · MinerTech® trademark · © 2017–2026, all rights reserved
+38 093 293 93 93 · +38 099 054 40 38 · Specialist Pavlo Leonidovych · strooks@gmail.com